SEPTEMBER 28, 2026

CONTRACT DOCUMENTS

Zone 2 Reservoir Electrical Service

SANTA YNEZ RIVER WATER CONSERVATION DISTRICT,
IMPROVEMENT DISTRICT NO.1

3622 Sagunto Street, P.O. Box 157
Santa Ynez, CA 93460

Phone (805) 688-6015 – Fax (805) 688-3078

TABLE OF CONTENTS

REQUEST FOR BIDS BR.1
BID SCHEDULE BR.8
BID BOND FOR ZONE 2 RESERVOIR ELECTRICAL SERVICE BR.9
NON-COLLUSION AFFIDAVIT TO BE EXECUTED BY BIDDER AND SUBMITTED WITH BID BR.11
INFORMATION REQUIRED OF BIDDER GENERAL INFORMATION BR.12
CONTRACT FORMS CF.1
AGREEMENT CF.1
AGREEMENT CERTIFICATE (IF CORPORATION) CF.5
AGREEMENT CERTIFICATE (IF PARTNERSHIP) CF.6
AGREEMENT CERTIFICATE (IF JOINT VENTURE) CF.7
PERFORMANCE BOND CF.8
PAYMENT BOND CF.10
GENERAL CONDITIONS GC.1
I. DEFINITIONS AND ABBREVIATIONS GC.1
II. SPECIFICATIONS, DRAWINGS AND RELATED DATA GC.3
III. DISTRICT-CONTRACTOR RELATIONS GC.4
IV. MATERIALS AND WORKMANSHIP GC.9
V. PROGRESS AND PAYMENT GC.10
VI. BONDS, INSURANCE, LEGAL RESPONSIBILITY, AND PUBLIC SAFETY GC.18
VII. STATUTORY REQUIREMENTS GC.21
VIII. MISCELLANEOUS GC.26
SPECIAL CONSIDERATIONS SC.1
I. GENERAL SC.1
II. EXECUTION SC.1

APPENDICES

Appendix A
Contract Change Order Form

Appendix B
Technical Specifications

Appendix C
Project Drawings

REQUEST FOR BIDS

RECEIPT OF BID: Please provide your written bid to the Santa Ynez River Water Conservation District, Improvement District No.1 (District), before 10:00 AM on the 15th of October, 2026.

BID SECURITY: Each bid shall be accompanied by a certified or cashier's check or bid bond in the amount of ten percent (10%) of the total bid price, payable to the District, as a guarantee that the bidder, if its bid is accepted, will promptly execute all necessary Contract Documents and provide the required submittals for approval, all within ten (10) calendar days of the date of written Notice of Award. A bid shall not be considered unless one of the forms of bidder security is enclosed with the bid.

DESCRIPTION OF WORK: The purpose of this project is to install a new electrical service and associated electrical infrastructure at the District's Zone 2 Reservoir site located in Los Olivos, California. The scope of work includes installation of a new 100-amp, 120/240-volt, single-phase, 3-wire metered service pedestal and approximately 656 linear feet of electrical conduit and associated electrical infrastructure to provide power to reservoir water mixer(s). The work includes installation of electrical feeders, junction boxes, pull boxes, conduit, and associated appurtenances, as shown in the project plans.

WORK SITE: The work site is located near 2201 Alamo Pintado Road, Los Olivos, California.

COMPLETION OF WORK: Project work will begin as soon as possible following contractor selection and issuance of a Notice of Award. All work must be completed in an expeditious manner. No liquidated damages will be imposed under the Contract, but the District reserves the right to terminate the Contract if the work is not being pursued diligently and expeditiously, in accordance with the contractor's submitted and approved schedule. All materials to be used for the project and all plans for installation must be approved by the District in writing prior to the commencement of any work. All work must be completed and accepted by the District before final payment is issued to the contractor.

PAYMENT: Payment shall be made by the District to eighty-five (85) percent of the work completed in monthly progress payments and a final payment. The fifteen (15) percent retention will be paid within 35 days following final acceptance of the work by the District.

FORM OF BID: The bid shall be made on the bid forms contained within the Contract Documents.

INSPECTION OF THE WORK SITE: Inspection of the work site prior to submitting a bid is required. To request an appointment for inspection of the work site, contact Dan Drugan at ddrugan@syrwd.org or (805) 579-6015.

Each bidding contractor shall inspect the work site and satisfy itself, by personal examination, of the location of the proposed work and the actual conditions of the work site. If during the course of its examination a bidding contractor finds facts or conditions which appear to conflict with the letter or spirit of the Contract Documents (including Drawings and Specifications), or with any other data furnished by the District, the contractor may request additional information and/or explanation from the District before submitting a bid.

The submission of a bid by a contractor shall constitute acknowledgment that, if awarded the contract, said contractor has relied and is relying on its own examination and understanding of (a) the Contract Documents, (b) the work site conditions, (c) access to the work site, (d) all other data, matters, and things requisite to the fulfillment of the work, and (e) existing services and utilities on and in the vicinity of the work site, and that said contractor is not relying on any representation or warranty of the District that is not contained in the Contract Documents. No claim for additional work or compensation will be allowed which is based upon a lack of knowledge of the above items.

DIR REGISTRATION REQUIREMENTS: The Department of Industrial Relations (DIR) requires that: (a) no contactor or subcontractor may be listed on a bid proposal for a public works project unless they are registered with DIR; (b) no contractor or subcontractor may be awarded a public works contract unless registered with DIR; and (c) work performed on the public works project is subject to compliance monitoring

and enforcement by DIR.

AWARD OF CONTRACT: Bids will be evaluated and a contract may be awarded when the District has received bids from contractors showing interest and knowledge of the described work. A contract award is currently scheduled to be considered as part of the District's Board of Trustees meeting on October 20, 2026. Upon written Notice of Award, the successful bidder shall promptly execute all necessary Contract Documents, provide the required insurance submittals, and furnish satisfactory performance bond and payment bond documents, both in the amount of 100 percent of the bid price.

SUBSTITUTION OF SECURITY: The selected contractor may elect to receive one hundred percent (100%) of payments due under the Contract Documents at the completion of the work, without retention of any portion of the payment by the District, by depositing proper security of equivalent value with the District in accordance with the provisions of Section 22300 of the Public Contract Code.

WAGE RATES: As required by the California Labor Code, not less than the general prevailing rates of per diem wages and not less than the general prevailing rate for overtime and holiday work in the locality in which the work is to be performed for each craft or type of worker needed to execute the work set forth by the Contract Documents, shall be paid to all workers employed for said work by the contractor or by any subcontractor performing any part of said work. A list of the prevailing wages, as determined by the Department of Industrial Relations, is on file at the District office, and can be found at *http://www.dir.ca.gov/DLSR/PWD/index.htm*. Said list shall be posted at the work site by the contractor.

The contractor shall comply with all applicable provisions of Section 16100 of Title 8 of the California Code of Regulations, which require the contractor to keep accurate records of the work performed as provided in Labor Code Section 1812, allow the District to inspect the contractor's payroll records pursuant to Labor Code Section 1776 and Section 16400(e) of Title 8 of the California Code of Regulations, and require the contractor to comply with all other requirements imposed by law.

CONTRACTOR'S REQUIREMENTS: The contractor shall be required to possess a valid C-10 Electrical Contractor License issued by the California Contractor's State License Board at the time of its bid, when the Contract is awarded, and for the entire duration of the work. Failure to possess one of the specified licenses at all required times shall constitute a default and breach by the contractor and give rise to District remedies.

PRESUMPTION OF SATISFACTORY QUALIFICATIONS OF SURETY: All bonds shall be in the form prescribed by the Contract Documents except as provided otherwise by law or regulation, and shall be executed by such sureties as are named in the current list of companies holding certificates of authority as acceptable sureties on federal bonds and as acceptable reinsuring companies as published in Circular 570 (amended) by the audit staff, Bureau of Government Financial Corporations, U.S. Treasury Department. A certified copy of such agent's authority to act must accompany all bonds signed by an agent.

DISTRICT'S RIGHTS RESERVED: The District reserves the right in its sole and absolute discretion to reject any or all bids, to waive any informality in a bid, and to make an award to a responsive and responsible bidder as determined by the District.

Contract Documents are available at the District's web site at http://www.syrwd.org.

Santa Ynez River Water Conservation District
Improvement District No.1

Paeter Garcia
General Manager

Date: 9/28/26

INSTRUCTIONS TO BIDDERS

GENERAL INFORMATION: The District, located at 3622 Sagunto Street, Santa Ynez, California 93460, will receive, until the time stipulated in the Request for Bids, sealed bids for:

ZONE 2 RESERVOIR ELECTRICAL SERVICE

FORM OF BID: The bid shall be made on the Bid Schedule bound herein (unless it has been modified by an addendum). All bids must designate the prices proposed and must be signed by the Bidder, with the Bidder's address. The total bid amount shall be given in figures and in writing. If an individual makes the bid, his name and mailing address must be shown. If made by a firm or partnership, the name and mailing address of each member of the firm or partnership must be shown. If made by a corporation, the bid must show the name of the state under the laws of which the corporation is chartered and the names, titles, and business address of the president, secretary, and treasurer.

DELIVERY OF BID: The sealed bid shall be delivered by the time and to the place stipulated in the Request for Bids. It is the Bidder's sole responsibility to verify that its bid is received by the District in proper time. Any bid received after the scheduled closing time for receipt of bids will be returned to the Bidder unopened.

OPENING OF BIDS: The bids will be opened and read at the time and place stipulated in the Request for Bids.

MODIFICATIONS AND ALTERNATIVE BIDS: Unauthorized conditions, limitations, or provisions attached to a bid will render it informal and may cause its rejection. The completed bid forms shall be without interlineations, alterations, or erasures. Alternative bids will not be considered unless called for by the District. Oral, facsimile, or telephonic bids or modifications will not be considered. Bids in which the prices obviously are unbalanced in the opinion of the District, may be rejected.

DISCREPANCIES IN BIDS: The Bidder shall furnish a price for all bid items in the Bid Schedule, and failure to do so will render the bid informal and may cause its rejection. In the event that the "amount" indicated for unit price items does not equal the product of the unit price and quantity, the unit price shall govern and the amount will be corrected accordingly. In the event that the subtotal bid price indicated does not agree with the sum of the prices bid on the individual bid items, the prices bid on the individual items shall govern and the subtotal for the schedule will be corrected accordingly. In the event that the total bid price indicated does not agree with the written total price bid, the written total bid shall govern and the total in figures will be corrected accordingly.

BID GUARANTEE: Each bid shall be accompanied by a certified or cashier's check or bid bond in the amount of not less than ten percent (10%) of the total amount bid in the bid. Said check or bond shall be made payable to the "Santa Ynez River Water Conservation District, Improvement District No.1" and shall be given as a guarantee that the Bidder, if awarded the work, will enter into a contract within ten (10) calendar days after written award notification by the District and will furnish the necessary insurance certificates, endorsements, performance bond and payment bond, and proposed work schedule for District approval. In case of refusal or failure to enter into said contract, the check or bid bond, as the case may be, shall be forfeited to the District. If the Bidder elects to furnish a bid bond as its bid guarantee, said Bidder shall use the bid bond form bound herein.

WITHDRAWAL OF BIDS: Bids may be withdrawn by bidder by means of a written request, signed by the bidder or its properly authorized representative. Such written request must be delivered to the District at the place stipulated in the Request for Bids for receipt of bids prior to the scheduled closing time for receipt

of bids. Following the scheduled time for receipt of bids, no bidder may withdraw its proposal until one of the following events has occurred: (1) the District and another bidder have entered into a fully executed contract for the Project; (2) the District has rejected all bids; or (3) 90 calendar days have elapsed since the bids were opened.

EXAMINATION OF CONTRACT DOCUMENTS: Each Bidder shall thoroughly examine and be familiar with the Contract Documents for the Project. The submission of a bid shall constitute an acknowledgment upon which the District may rely that the Bidder has thoroughly examined and is familiar with the Contract Documents. The failure or neglect of a Bidder to receive or examine any of the Contract Documents shall in no way relieve the Bidder from any obligations with respect to its bid or to the Contract. No claim for additional compensation will be allowed which is based upon a lack of knowledge of any contract document.

INTERPRETATION OF CONTRACT DOCUMENTS: No oral interpretations will be made to any Bidder as to the meaning of the Contract Documents. Requests for an interpretation shall be made in writing and hand delivered, emailed, or sent by FAX to Santa Ynez River Water Conservation District, Improvement District No.1, Attention: Mr. Dan Drugan, P.O. Box 157, Santa Ynez, CA 93460, FAX (805) 688-3078 (ddrugan@syrwd.org) no later than seven (7) working days before the time announced for opening the bids. Interpretations of the Contract Documents will be in the form of an addendum to the Contract Documents and, when issued, will be sent as promptly as practical to all parties to whom the Contract Documents have been issued. All such addenda shall become part of the Contract.

BID PRICES: Bid prices shall include everything necessary for the completion of the Project and fulfillment of the contract including, but not limited to, furnishing all required materials, equipment, tools, and other facilities and all management, superintendent, labor, and services, except as may be provided otherwise in the Contract Documents. Bid prices shall include all applicable federal, state, and local sales and use taxes. In the event of a difference between a price quoted in words and a price quoted in figures for the same quotation, the words shall be the amount bid.

QUALIFICATIONS OF SURETY: All bonds shall be in the form prescribed by the Contract Documents except as provided otherwise by law or regulation and shall be executed by such sureties as are named in the current list of companies holding certificates of authority as acceptable sureties on federal bonds and as acceptable reinsuring companies as published in Circular 570 (amended) by the audit staff, Bureau of Government Financial Corporations, U.S. Treasury Department. A certified copy of such agent's authority to act must accompany all bonds signed by an agent.

QUALIFICATION OF BIDDERS: Each Bidder shall be skilled and regularly engaged in the general class or type of work called for under the contract. Each Bidder shall submit a statement setting forth the Bidder's experience on the form provided herewith.

Each Bidder shall possess a valid C-10 Electrical Contractor License issued by the California Contractor's State License Board at the time of bid submittal, at time of award of contract, and throughout the performance of the contract. The class of license shall be applicable to the work specified in the Request for Bids. Each Bidder's project supervision shall also have no less than five (5) years' experience in the magnitude and character of the work bid. Each Bidder's project supervision shall have successfully completed no less than three (3) similar type projects.

It is the intention of the District to award a contract to a responsive and responsible Bidder who furnishes satisfactory evidence that the Bidder has the requisite experience and ability, and that the Bidder has sufficient capital, facilities, and plant to prosecute the work successfully and properly, and to complete it within the time specified in the approved schedule.

To determine the degree of responsibility to be credited to the Bidder, the District will weigh any evidence that the Bidder and its employees have performed satisfactorily other contracts of like nature, magnitude and comparable difficulty and comparable rates of progress.

DISQUALIFICATION OF BIDDERS: More than one bid from an individual, firm partnership, corporation or association under the same or different names will not be considered. Reasonable grounds for believing that any Bidder is interested in more than one bid for the work contemplated will cause the rejection of all bids in which such Bidder is interested. If there is reason for believing that collusion exists among any Bidders, all such bids will be rejected and none of the participants in such collusion will be considered for future bids.

REJECTION OF BIDS: The District reserves the right in its sole discretion to reject any bids which are incomplete, obscure or irregular; any bids which omit any one or more items on which the bids are required; any bids which omit unit prices if unit prices are required; any bids in which unit prices are unbalanced in the opinion of the District; any bids accompanied by insufficient or irregular bid security; and any bids from Bidders who have previously failed to perform properly or to complete, on time, contracts of any nature. The District reserves the right to reject any and all bids.

RETURN OF BIDDER'S GUARANTEE: Within ten (10) calendar days after the award of the contract, District will return the bid guarantees accompanying such if the bids are not considered in making the award. All other bid guarantees will be held until the contract has been finally executed after which they will be returned to the respective Bidders whose bids they accompany.

ERRORS IN BID: Bidders and their authorized agents are expected to examine the Contract Documents and all other instructions pertaining to the work and work site which will be open to their inspection. Failure to do so will be at the Bidder's own risk and the Bidder cannot secure relief on the plea of error in bid, except as allowed by law.

INSPECTION OF SITE OF WORK: Bidders are required to attend the mandatory pre-bid meeting, if any, specified in the Request for Bids. Inspection of the sites of the work is required in order for the Bidder to satisfy themselves, by personal examination, of each location of the proposed work and as to the actual conditions of and at the sites of work. If during the course of its examination, a Bidder finds facts or conditions which appear to conflict with the letter or spirit of the Contract Documents or with any other data furnished by the District, the Bidder may apply to the District for additional information and explanation before submitting a bid.

The submission of a bid by the Bidder shall constitute the acknowledgment that, if awarded the contract, the Bidder has relied and is relying on its own examination of (a) the sites of the work, (b) the access to the sites, and (c) all other data, matters, and things requisite to the fulfillment of the work and on the Bidder's own knowledge of existing services and utilities on and in the vicinity of the sites of the work to be constructed under the contract, and not on any representation or warranty of the District. No claim for additional compensation will be allowed which is based upon a lack of knowledge of the above items.

AWARD AND EXECUTION OF CONTRACT: Award of contract, if awarded, will be on the basis of lowest overall cost to the District and will be made to the responsible and responsive Bidder whose bid complies with all the requirements prescribed. Any such award will be made within thirty (30) calendar days after the opening of the bids. If the lowest responsible and responsive Bidder refuses or fails to execute the contract as herein described, the District may award the contract to the second lowest responsible and responsive Bidder. Such award, if made, will be made within sixty (60) calendar days after opening of bids. If the second lowest responsible and responsive Bidder refuses or fails to execute the contract, the District may award the contract to the third lowest responsible and responsive Bidder. Such award, if made, will be made within ninety (90) calendar days after opening of bids. The District is not obligated to select the lowest Bidder if it is determined by the District that the lowest Bidder is not qualified or does not have the experience necessary to perform the work covered by the Project Drawings and Specifications.

WORKER'S COMPENSATION REQUIREMENTS: The Bidder should be aware that, in accordance with Section 3700 of the California Labor Code, the Bidder will, if awarded the contract, be required to secure the payment of compensation to the Bidder's employees and execute the Worker's Compensation Certificate in the form contained in these Contract Documents.

PROPOSAL

ZONE 2 RESERVOIR ELECTRICAL SERVICE

PROPOSAL TO: The Santa Ynez River Water Conservation District, Improvement District No. 1:

The undersigned, as Bidder, declares that Bidder is familiar with the location of the proposed work and Bidder proposes and agrees, if this bid is accepted, that Bidder will contract with the District in the prescribed form of contract, hereto annexed, to furnish all plant, labor, materials, equipment, tools, transportation and services necessary to do all work in accordance with the Contract Documents, and any addenda thereof, for the above, filed in the office of the District and as specified in the contract, in the manner and time therein prescribed, and that the Bidder will take full payment therefore at the lump sums set forth in the bid schedule.

Bidder has examined copies of the Contract Documents including the following addenda present (receipt of all of which is hereby acknowledged).

Number of Addendum	Date

Failure to acknowledge addenda shall be cause for bid rejection. In case of discrepancy between words and figures, the words shall prevail.

Bidder further agrees that, within ten (10) calendar days after the date of Notice of Award by the District, Bidder will: 1) provide a proposed work schedule for District review and approval; 2) execute said contract in the required form which includes the Request for Bids, Instructions to Bidders, Bid Schedule, Information Required of Bidder, General Conditions, Technical Specifications, Drawings, and all Addenda issued by District; and 3) provide the required insurance and bonds, and the required insurance certificates and endorsements that are a part of the Contract Documents.

The bid will remain open for the period stated in the Request for Bids unless otherwise required by law.

The following are included and are to be considered as forming a part of this bid: (1) Bid Schedule, (2) Bid Bond, (3) Non-collusion Affidavit, and (4) Information Required of Bidder.

The Bidder makes this bid to the District, including all representations made in it, under penalty of perjury.

Date: _____

Bidder: _____

Signature:_____

Print Name & Title: _____

_____

Contractor's License Number:_____

BID SCHEDULE

The following bid schedule lists the general items necessary to complete the work. Contract award shall be made as described under the Section entitled "Award of Contract". The Contractor agrees that all Federal, State, and local sales and use taxes are included in the bid prices for the work.

BID SCHEDULE

Item	Estimated Quantity	Units	Amount
1. Mobilization / Demobilization	1	Lump Sum	
Item 2 shall include all material, labor, and equipment necessary to complete the work as described and depicted in the Project Drawings and Specifications.			
2. Zone 2 Reservoir			
Materials	1	Lump Sum	
Labor	1	Lump Sum	

Total Bid*

Total Bid in Words: _____

Note: *Total should be presented in words and figures.

BID BOND for
ZONE 2 RESERVOIR ELECTRICAL SERVICE

KNOW ALL MEN BY THESE PRESENTS:

That we _____
as principal, and _____
as surety, are held and firmly bound unto the Santa Ynez River Water Conservation District, Improvement District No.1 (District), in the sum of _____
dollars ($ _____) to be paid to said District, for which payment, well and truly to be made: we bind ourselves, our heirs, executors, and administrators, successors or assigns, jointly and severally by these presents.

THE CONDITION OF THIS OBLIGATION IS SUCH:

Whereas, the principal has submitted a bid to the District to perform the work required under the bidding schedule of the District's Contract Documents.

That if the certain bid to construct certain work and improvements for the District, as referred to in the Request for Bids, is accepted by the Board of Trustees of said District and if the above bound principal, heirs, executors, administrators, successors and assigns shall duly enter into and execute a contract to construct said improvements aforementioned, and shall execute and deliver the two bonds required by law, and perform in all other respects the agreement created by the acceptance of this bid, within ten (10) calendar days from the date of a notice to the above bound principal, then this obligation shall become null and void, otherwise it shall be and remain in full force and effect.

The surety stipulates and agrees that the obligations of said surety shall in no way be impaired or affected by an extension of time within which the District may accept such bid and surety further waives notice of any such extension. In the event suit is brought upon this bond by said District and District prevails, said principal and surety shall pay all costs incurred by said District in such suit, including reasonable attorneys' fees and costs to be affixed by the court.

IN WITNESS WHEREOF, we have hereunto set our hands and seals this _____ day of _____, 2026.

_____(Seal)

_____(Seal)

_____(Seal)

_____(Seal)

STATE OF CALIFORNIA)
COUNTY OF _____)

On this _____ day of _____ 2026, before me, _____, a notary public in and for the County of _____, State of California, personally appeared _____ known to me to be the person whose name is subscribed to the within instrument at the Attorney in Fact of _____, and acknowledged to me that he subscribed the name of _____, thereto as surety, and his own name as Attorney in Fact,

In witness whereof I have hereunto set may hand and affixed my official seal the day and year in this certificate first above written.

_____

Notary Public in and for said County and State

NON-COLLUSION AFFIDAVIT TO BE EXECUTED BY BIDDER AND SUBMITTED WITH BID

State of California)
) ss.
County of _____)

_____, being first duly sworn, deposes and says that he or she is _____ of _____, the party making the foregoing bid that the bid is not made in the interest of, or on behalf of, any undisclosed person, partnership, company, association, organization, or corporation; that the bid is genuine and not collusive or sham; that the Bidder has not directly or indirectly induced or solicited any other Bidder to put in a false or sham bid, and has not directly or indirectly colluded, conspired, connived, or agreed with any Bidder or anyone else to put in a sham bid, or that anyone shall refrain from bidding; that the Bidder has not in any manner, directly or indirectly, sought by agreement, communication, or conference with anyone to fix the bid price of the Bidder or any other Bidder, or to fix any overhead, profit, or cost element of the bid price, or that of any other Bidder, or to secure any advantage against the public body awarding the contract of anyone interested in the proposed contract; that all statements contained in the bid are true; and, further, that the Bidder has not, directly or indirectly, submitted his or her bid price or any breakdown thereof, or the contents thereof, or divulged information or data relative thereto, or paid, and will not pay, any fee to any corporation, partnership, company, association, organization, bid depository, or to any member or agent thereof to effectuate a collusive or sham bid.

_____
Signature of Contractor/Bidder

INFORMATION REQUIRED OF BIDDER

GENERAL INFORMATION

The Bidder shall furnish the following information. Additional sheets may be attached if necessary. The legal address described below shall be used for all communications and notices with the Bidder.

The Bidder hereby certifies that it has reviewed the insurance coverage requirements specified above and in the General Conditions. The Bidder further certifies that it can meet all the requirements for insurance including insurance coverage of its subcontractors.

(1) Address:_____

_____

(2) Type of Firm: Individual _____Partnership_____Corporation_____ Joint Venture

(Check one)

(3) Telephone:

Facsimile: _____

(4) Contractor's License: Primary Class: _____
License No: _____
Expiration Date: _____

The Bidder is required to hold a valid C-10 Electrical Contractor License at the time of the bid and for the duration of the contract.

Supplemental classifications held, if any:

(5) Names and titles of all principles of the firm:

_____

_____

_____

(6) Number of years a contractor in construction work of this type: _____

(7) Three comparable projects recently constructed by Bidder and its employees: (Bidder shall also include its subcontractor's experience for all types of work covered by the bid. Additional sheets may be used.

PROJECT NO. 1

Description of the Work:_____
_____
Owner Name:_____
Contact Name:_____
Contact Address:_____
Telephone:_____
Contract Amount:_____
Date Started:_____
Date Completed:_____

Design Engineer:_____
Contact Name:_____
Contact Address:_____

Telephone:_____

Construction Manager:_____
Contact Name:_____
Contact Address:_____

Telephone:_____

PROJECT NO. 2

Description of the Work:_____
_____
Owner Name:_____
Contact Name:_____
Contact Address:_____
Telephone:_____
Contract Amount:_____
Date Started:_____
Date Completed:_____

Design Engineer:_____
Contact Name:_____
Contact Address:_____

Telephone:_____

Construction Manager:_____
Contact Name:_____
Contact Address:_____

Telephone:_____

PROJECT NO. 3

Description of the Work:_____
_____
Owner Name:_____
Contact Name:_____
Contact Address:_____
Telephone:_____
Contract Amount:_____
Date Started:_____
Date Completed:_____

Design Engineer:_____
Contact Name:_____
Contact Address:_____

Telephone:_____

Construction Manager:_____
Contact Name:_____
Contact Address:_____

Telephone:_____

(8) List of Subcontractors:

Section 4101 of the California Public Contract Code requires the Bidder to list below the name and location of the place of business of each subcontractor who will perform work or labor or render service to the prime contractor in or about the construction of the work or improvement, or a subcontractor that specifically fabricates and installs a portion of the work or improvement according to detailed drawings contained in the plans and specifications, in an amount in excess of one half of one percent (0.5%) of the prime contractor's total bid price. The Bidder shall also list below the portion of the work which will be done by each subcontractor under this contract. The prime contractor shall list only one subcontractor for each portion as is defined by the prime contractor in its bid.

SUBCONTRACTOR NO. 1

Name as shown on Business License: _____
License Number : _____
Address: _____
_____
Telephone:_____
Specific Description of Subcontract: _____
_____
_____
_____
_____
Percent of Contract:_____

SUBCONTRACTOR NO. 2

Name as shown on Business License: _____
License Number : _____
Address: _____
_____
Telephone:_____
Specific Description of Subcontract: _____
_____
_____
_____
_____
Percent of Contract:_____

The above information and representations are made and furnished by the Bidder under penalty of perjury.

Date: _____

Signature:_____

Print Name & Title: _____

CONTRACT FORMS

AGREEMENT

This AGREEMENT, made and entered into this ___ day of, _____, by and between the Santa Ynez River Water Conservation District, Improvement District No.1, hereinafter referred to as "Owner," and _____, hereinafter referred to as "Contractor."

IN CONSIDERATION OF THE MUTUAL PROMISES, COVENANTS AND CONDITIONS HEREINAFTER SET FORTH, THE PARTIES DO HEREBY AGREE AS FOLLOWS:

ARTICLE I: GENERAL

For and in consideration of the payments and agreement hereinafter mentioned to be made and performed by said Owner, said Contractor agrees with said Owner to perform and complete in a workmanlike manner all work required under the Bid Schedule of said Owner's Contract Documents, in accordance with the Specifications and Drawings therefore (the Work), to furnish at Contractor's own expense all labor, materials, equipment, tools, transportation, and services necessary therefore, except such materials, equipment, and services as may be stipulated in said Specifications to be furnished by said Owner, and to do everything required by this Agreement and the said Specifications and Drawings, for the sum of _____ pursuant to the Bid Price attached hereto and made a part hereof.

ARTICLE II: PAYMENT

For furnishing all said labor, materials, equipment, tools, and services, furnishing and removing all plant, temporary structure, tools, and equipment, and doing everything required by this Agreement and the said Specifications and Drawings; also for all loss and damages arising out of the nature of the work aforesaid, or from the action of the elements, or from any unforeseen difficulties which may arise during the prosecution of the work until its acceptance by said Owner, and for all risks of every description in connection with the work; also for all expenses resulting from the suspension or discontinuance of work, except as in the Contract Documents are expressly stipulated to be borne by said Owner and for completing the work in accordance with the requirements of said Specifications and Drawings, said Owner will pay, and said Contractor shall receive, in full compensation therefore, the price named in the above-mentioned Bid Price.

ARTICLE III: CONSIDERATION

The Contractor agrees to perform the work according to the terms of this Agreement for the above-mentioned price and Owner agrees to pay Contractor at the time, in the manner, and upon the conditions stipulated in the said Contract Documents; and the said parties for themselves, their heirs, executors, administrators, successors, and assigns, do hereby agree to the full performance of the covenants herein contained.

ARTICLE IV: INDEMNIFICATION

The Contractor shall defend, indemnify, protect, and hold the Owner, Owner Representative, and their agents, officers, elected officials, directors, Trustees, employees, and volunteers harmless from and against any and all liabilities, claims, costs, expenses, losses, damages and fees established, asserted, or incurred which arise out of, relate to, or result from, the Work, this Agreement, the Contract Documents and any and all documents prepared and/or services performed in connection therewith, as well as the failure, neglect, or refusal of the Contractor and/or its subcontractors, subconsultants, agents, officers, or employees to perform the Work and/or any other obligations of the Contractor under this Agreement, the Contract Documents and any and all documents prepared in connection therewith. This indemnification shall include, but not be limited to, the costs, expenses, and damages incurred by the Owner and/or Owner Representative to defend any such claims, stop notices, or lawsuits, to which the Owner and/or Owner Representative are a party.

Where approval by the Owner is indicated, it is understood to be conceptual approval only and does not relieve the Contractor of responsibility for complying with all rules, regulations, laws, codes, industry standards, and liability for damages caused by the negligent acts, errors, omissions, noncompliance with industry standards, or the willful misconduct of the Contractor or its subcontractors. Contractor agrees to defend, indemnify, and hold harmless the Owner, Owner Representative, and their elected officials, Trustees, directors, officers, agents, and employees from and against any and all claims, costs, suits, and damages, including attorney's fees, arising from the willful misconduct or negligent acts, errors, or omissions of the Contractor and/or its subcontractors.

ARTICLE V: WAGES

The general prevailing rates of per diem wages and general prevailing rate for holiday and overtime work in the locality in which the work is to be performed have been determined by the Owner. Such general prevailing rates of per diem wages are incorporated in and made a part of this Agreement. The Contractor agrees that Contractor, or any subcontractor thereunder, will pay not less than the specified prevailing rates to all workers employed in the performance of this Agreement.

Any Contractor who is awarded a public works project and intends to use a craft or classification not shown on the prevailing wage determinations may be required to pay the wage rate of that craft or classification most closely related to it as shown in the general determinations effective at the time of the request for bid.

ARTICLE VI: HOURS AND WORKING CONDITIONS

The Owner is a public entity in the State of California and is subject to the provisions of the Government Code and the Labor Code of the State. It is stipulated and agreed that all provisions of law applicable to public contracts are a part of this Agreement to the same extent as though set forth herein and will be complied with by the Contractor.

ARTICLE VII: STANDARD OF CARE

Contractor's services under this Agreement will be performed in accordance with generally accepted professional practices and principles and in a manner consistent with the level of care and skill ordinarily exercised by members of the same profession currently practicing under similar conditions. The Contractor shall observe and cause all Work and deliverables to conform to all applicable federal, state and local laws and regulations.

Contractor shall perform services in a prompt and timely manner in accordance with this Agreement. Time is of the essence in this Agreement due to the Owner's need for this improvement to continue to protect and preserve Owner assets in the interest of its customers.

ARTICLE VIII: COMPONENTS OF AGREEMENT

The Request for Bid, Description of Work, Bid, Contract Forms, Notice to Proceed, General Conditions, Technical Specifications, Drawings, Drawing Notes, Addenda, Change Orders, and all other documents issued and/or made available by the Owner with respect to the Work and the foregoing prior to or after the receipt of bid are incorporated in and made a part of this Agreement.

ARTICLE IX: INUREMENT

Contractor shall not assign, sublet, or transfer this Agreement, or any rights under or interest in this Agreement, without the prior written consent of the Owner. If Contractor subcontracts any portion of the Work to be performed, Contractor shall be as fully responsible to the Owner for the performance of the Work, including errors and omissions of Contractor's subcontractors and of the persons employed by the subcontractor, as Contractor is for the acts and omissions of persons directly employed by the Contractor. Contractor shall bind every subcontractor and every subcontractor of a subcontractor to the terms of this Agreement and the Contract Documents unless specifically noted to the contrary in the respective subcontract approved in writing by the Owner.

IN WITNESS WHEREOF, the parties have caused this Agreement to be executed the day and year first above written.

Santa Ynez River Water Conservation District, Improvement District No.1

By : _____
Jeff Clay
President, Board of Trustees

Attest and Seal:

_____
Paeter Garcia
General Manager
Santa Ynez River Water Conservation District, Improvement District No.1

Approved as to Form:

_____
Jessica Diaz, Brownstein Hyatt Farber Schreck, LLP

By : _____(Seal)
(Contractor)

_____
(Signature)

_____
(Title)

Contractor Attest and Seal
(If Corporation Only)

_____
Secretary

AGREEMENT CERTIFICATE
(IF CORPORATION)

STATE OF)
) SS:
COUNTY OF _____)

I CERTIFY that at a meeting of _____
_____
a corporation existing under the laws of the State of _____, held on _____, 2026, the following resolution was duly passed and adopted:

"RESOLVED, that _____, as _____ of the Corporation, be and is authorized to execute the Agreement dated _____, 2026, between the Santa Ynez River Water Conservation District, Improvement District No.1 and this Corporation and that his/her execution thereof, attested _____ shall be the official act and deed of this Corporation."

I further certify that said resolution is now in full force and effect.

IN WITNESS WHEREOF, I have hereunto set my hand this _____, day of _____, 2026.

_____
Secretary

(SEAL)

AGREEMENT CERTIFICATE
(IF PARTNERSHIP)

STATE OF)
) SS:
COUNTY OF _____)

I CERTIFY that a meeting of the Partners of the _____
_____
a partnership existing under the laws of the State of _____, held on _____, 2026, the following resolution was duly passed and adopted:

"RESOLVED, that _____, as _____ of the Partnership, be and is authorized to execute the Agreement dated _____, 2026, between the Santa Ynez River Water Conservation District, Improvement District No.1 and this partnership and that his/her execution thereof, attested by the _____ shall be the official act and deed of this Partnership."

I further certify that said resolution is now in full force and effect.

IN WITNESS WHEREOF, I have hereunto set my hand this _____, day of _____, 2026.

_____
Partner

(SEAL)

AGREEMENT CERTIFICATE
(IF JOINT VENTURE)

STATE OF)
) SS:
COUNTY OF _____)

I CERTIFY that a meeting of the Principals of the _____
_____
_____,
a joint venture existing under the laws of the State of _____, held on _____, 2026, the following resolution was duly passed and adopted:

"RESOLVED, that _____, as _____ of the Joint Venture, be and is authorized to execute the Agreement dated _____, 2026, between the Santa Ynez River Water Conservation District, Improvement District No.1 and this joint venture and that his/her execution thereof, attested by the _____ shall be the official act and deed of this Joint Venture."

I further certify that said resolution is now in full force and effect.

IN WITNESS WHEREOF, I have hereunto set my hand this _____, day of _____, 2026.

_____
Managing Partner

(SEAL)

PERFORMANCE BOND

KNOW ALL MEN BY THESE PRESENTS,

That _____, as Principal, and _____ a surety corporation, organized and existing under and by virtue of the laws of the State of _____and duly and regularly authorized to transact business within the State of California, as sureties, are held and firmly bound unto the Santa Ynez River Water Conservation District, Improvement District No.1 (District), in the just and lawful sum of _____dollars, ($ _____) lawful money of the United States of America, for the payment of which, well and truly to be made, we bind ourselves, our heirs, executors, administrators, successors and assigns, jointly and severally, firmly by these presents.

Now the condition of the foregoing obligation is such that whereas the above bounden Principal entered into a contract dated the _____ day of _____, 2026 with the District, whereby said Principal contracted to furnish all labor and materials for the

Zone 2 Reservoir Electrical Service

for the District, as a public works project, in accordance with the Contract Documents therefore, and referred to in the aforesaid contract, which are incorporated by this reference and made a part hereof.

The condition of this obligation is such that if the above-bounded Principal, its heirs, executors, administrators, successors or assigns shall abide by, keep, and perform the covenants, conditions, requirements, obligations, and provisions of the aforesaid contract, any alterations thereof, or any regulations pertaining thereto on its or their part to be kept and performed at the time and in the manner herein specified and if they shall also indemnify and hold the District, its elected and appointed officials, directors, trustees, officers, agents, and employees harmless from all liability, costs, losses, expenses, and attorney's fees therein, then this obligation shall become null and void; but otherwise, it shall be and remain in full force and effect.

As a part of the obligations secured hereby and in addition to the face amount specified above, there shall be included, to the aforesaid bond sum, costs and reasonable expenses and costs, including attorneys and paralegal fees, incurred by the District in successfully enforcing such obligation, all to be taxed as costs and included in any judgment rendered hereon.

The Surety hereby stipulates and agrees that no change, extension of time, alteration or addition to the terms of the contract or to the work to be performed thereunder or the Specifications accompanying the same shall in any way affect its obligations on this bond; and it does hereby waive notice of any such change, extension of time, alteration or additions to the terms of the contract, to the work or to the Specifications.

Whenever the Principal shall be, and declared by the District, in default under the contract, the Surety shall promptly remedy the default or shall promptly pay the amount of the bond herein.

NOW THEREFORE, if the above-bounden Principal, shall well and truly perform or cause to be performed every and all of the requirements in said contract, as in said contract set forth, then this obligation to be null and void, otherwise to remain in full force and effect.

Given under our hands and sealed with our seals this _____day of _____, 2026.

_____	_____
(Surety Signature)	(Principal Signature)
_____	_____
Individual/Partnership/Corporation	Individual/Partnership/Corporation
_____	_____
(Type Name & Title)	(Type Name & Title)
_____	_____
(Address)	(Address)
_____	_____
(City/State/Zip Code)	(City/State/Zip Code)
_____	_____
(Telephone)	(Telephone)

PAYMENT BOND

KNOW ALL MEN BY THESE PRESENTS,

That we, _____ , as Principal, and _____, a surety corporation, created and organized and existing under and by virtue of the State of _____, having its head office and principal place of business in _____as surety, and duly authorized to transact business within the State of California as Surety, are held and firmly bound unto the Santa Ynez River Water Conservation District, Improvement District No.1 (District), for the use and benefit of any and all persons, companies, or corporations who perform work or labor or furnish materials, provisions, provender or other supplies used in, upon, for or about the performance of the work contracted to be done under the contract herein mentioned, or rent or hire of teams, or machinery for or contributing to said work to be done, in the sum of _____ dollars ($_____), lawful money of the United States of America, to be paid to such persons, companies or corporations, for which payment, well and truly to be made, we bind ourselves, our heirs, executors, administrators, successors and assigns, jointly and severally, firmly by these presents.

The condition of the above obligation is such that whereas the above bounden Principal has entered into a contract dated _____ day of _____ , 2026, with the District, for the District's

Zone 2 Reservoir Electrical Service

, in accordance with the Contract Documents therefore, and referred to in the aforesaid contract, which are incorporated by this reference and made a part hereof.

NOW THEREFORE, if the above bounden Principal, or any subcontractor or contractors fail to pay for any materials, provisions, provender or other supplies or teams or machinery used in, upon, for or about the performance of said work contracted to be done, or for any work or labor thereon of any kind or for amounts due under the Unemployment Insurance Act with respect to such work or labor, the surety of this bond will pay the same to an amount not exceeding the sum specified in this bond. This bond shall inure to the benefit of any and all persons entitled to file claims under California Civil Code Section 3181, so as to give a right of action to such persons or assigns in any suit brought upon this bond.

As part of the obligations secured hereby and in addition to the face amount specified above, there shall be included, in addition to the aforesaid bond sum, costs and reasonable expenses and fees, including attorneys' and paralegal fees and costs, incurred by the District, in successfully enforcing the obligations undertaken herein by the Principal and/or Surety, all be taxed as costs and included in any judgment rendered thereon.

The Surety hereby stipulates and agrees that no change, extension of time, alteration or addition to the terms of the contract or to the project or work to be performed thereunder, or the specifications and drawings that accompany same, shall in any way affect its obligations on this bond; and it does hereby waive notice of any such change, extension of time, alterations or addition to the terms of the contract, to the work or project, or to the drawings and specifications.

Whenever the Principal shall be, and declared by the District to be, in default under the above contract, the Surety shall promptly remedy the default, or shall promptly pay the amount of the bond herein.

For the satisfactory completion of the project and the contract hereunder, the above obligations shall hold good for a period of one (1) year after the completion of the project and its acceptance by the District, during which time if Principal shall fail to make full, complete and satisfactory repair and replacements and totally protect the District from loss or damage made evident during the period of one year from the date of acceptance of the work and resulting from or caused by defective materials or faulty workmanship, the above obligations shall remain in full force and effect. The obligation of the Surety hereunder shall continue so long as any obligation of the Principal remains.

Dated this _____ day of _____, 2026

_____
(Principal)

_____
(Surety)

WORKERS' COMPENSATION CERTIFICATE

I, Contractor, am aware of the provisions of Section 3700 of the Labor Code which requires every employer to be self-insured against liability for workers' compensation or to undertake self-insurance in accordance with the provisions of that Code, and I will comply with such provisions before commencing the performance of this contract.

Date: _____

By: _____
(Contractor)

_____
(Signature)

_____
(Title)

NOTE: If Contractor is a corporation, the legal name of the corporation shall be set forth above, together with the signature of the officer or officers authorized to sign contracts on behalf of the corporation; if the Contractor is a partnership, the true name of the firm shall be set forth above, together with the signature of the partner or partners authorized to sign contracts on behalf of the partnerships; and if the contractor is an individual, his/her signature shall be typed above; if a limited partnership, the names of the general partners and limited partners shall be shown.

GENERAL CONDITIONS

I. DEFINITIONS AND ABBREVIATIONS

Whenever in these specifications or other Contract Documents where these specifications govern, the following terms, or pronouns in place thereof, are used, they shall be interpreted as follows**:**

I.1. Abbreviations

AASHO	American Association of State Highway Officials
ACI	American Concrete Institute
AISC	American Institute of Steel Construction
ASTM	American Society for Testing and Material
AWS	American Welding Society
AWWA	American Water Works Association
CAL-OSHA	Occupational Safety and Health Act as enforced and interpreted by the State of California, Division of Industrial Safety.
IEEE	Institute of Electrical and Electronics District Representatives
NACE	National Association of Corrosion District Representatives
NEC	National Electrical Code
NEMA	National Electrical Manufacturers Association
PCA	Portland Cement Association
UBC	Uniform Building Code
UL	Underwriters Laboratories, Inc.

I.2. Agreement

The written contract between the Owner and the Contractor covering the Work to be performed; when other documents are attached to the Agreement, they become part of the Contract.

I.3. Change Order

A document recommended by the Owner, which is signed by the Contractor and the Owner and authorizes an addition, deletion, or revision in the Work, or an adjustment in the Contract Price or the Contract Time, issued on or after the Effective Date of the Agreement.

I.4. Contract

The word "Contract" shall mean the Contract Documents and shall include the written Agreement entered into by the Owner and the Contractor for the Work described in the Specifications and shown on the Drawings, together with the request for bid, Bid, Bid Price, Information Required of Contractor, Non-Collusion Affidavit, Agreement Certificates, Certificates of Insurance, Insurance Endorsements, Escrow Agreement for Security Deposits in Lieu of Retention, Notice to Proceed, General Conditions, Technical Specifications, Drawings, all addenda and Change Orders issued by the Owner with respect to the foregoing and all modifications issued by the Owner and signed by the Contractor. The Contractor shall file a Payment Bond and Performance Bond approved by the District in conformance with Chapter 7 of the California Civil Code if the contract amount is in excess of $25,000.

1.5 Contract Documents

The words “Contract Documents” are any or all of the documents listed in the Contract.

I.6. Contract Time

The number of successive calendar days stated in the Contract Documents for the completion of the Work.

I.7. Contractor

The word "Contractor," when used in these Specifications or in the Contract or Agreement shall mean the party entering into contract with the Owner for performance of the Work called for in these Specifications and shown on the Drawings, including the Contractor's authorized agents.

I.8. Day

A calendar day of 24 hours measured from midnight to the next midnight.

I.9. Defective Work

Work that is unsatisfactory, faulty, or deficient; or that does not conform to the Contract Documents; or that does not meet the requirements of any inspection, reference standard, test, or approval referred to in the Contract Documents; or work that has been damaged prior to the District Representative's recommendation of final payment.

I.10. Drawings

The word "Drawings" or "Contract Drawings" shall mean those drawings accompanying the Specifications which show the location, nature, extent and form of the Work, together with applicable details.

I.11. District Representative

The word "District Representative," when used in these specifications or in the Contract or Agreement shall mean the individual who has been duly authorized by the District, during the course of construction, to make all day-to-day field inspections, resolve field problems, interpret plans and estimate and compute payments due the Contractor, both progress and final, and includes the employee or other authorized representative.

I.12. Laboratory

The designated laboratory authorized by the Owner to test materials and work involved in the Contract.

I.13. Modification

Modification means either a written amendment to the Contract signed by both parties or a Change Order as defined in these Specifications.

I.14. Notice To Proceed

The written notice issued by the Owner to the Contractor authorizing the Contractor to proceed with the Work and establishing the date of commencement of the Contract Time. The Contractor shall not begin work at the site until the District General Manager or authorized designee issues the Notice to Proceed.

I.15. Owner and District

The words "Owner" and "District" shall be synonyms and when used in these Specifications or in the Contract or Agreement, shall mean the Santa Ynez River Water Conservation District, Improvement District No.1.

I.16. Project

Project means the total construction set forth in the Contract Documents herein including amendments, of which, the Work performed under the Contract may be the whole or a part.

I.17. Shop Drawings

All drawings, diagrams, illustrations, schedules and other data which are specifically prepared by or for the Contractor and submitted by the Contractor to illustrate some portion of Work and all illustrations,

brochures, standard schedules, performance charts, instructions, and diagrams to illustrate material or equipment for some portion of the Work.

I.18. Similar Words

Whenever in the Contract or Specifications or upon the Contract Drawings the words "Directed", "Ordered", "Prescribed", or words of like import are used, it shall be understood to refer to the District Representative.

I.19. Specifications

The word "Specifications" shall mean the detailed and precise description of how the Work described shall be accomplished, together with all addenda and change orders issued with respect thereto.

I.20. Subcontractor

The word "Subcontractor" shall mean any person, firm or corporation entering into agreement with the Contractor for performance of the Work, or supplying materials to be incorporated into the Work, or any part of the Contractor's obligation under the Contract.

I.21. Underground Utilities

All pipelines, conduits, ducts, cables, wires, manholes, vaults, tanks, tunnels, or other such facilities or attachments, and any encasements containing such facilities which have been installed underground to furnish any of the following services or materials: water, sewage and drainage removal, electricity, gases, steam, liquid petroleum products, telephone or other communications, cable television, traffic, or other control systems.

I.22. Work

Work includes all labor and equipment necessary for the construction required by the Contract and all materials incorporated or to be incorporated in such construction.

II. SPECIFICATIONS, DRAWINGS AND RELATED DATA

II.1. General

a. The intent of these documents is that the Contractor furnish all plant, labor, materials, equipment, transportation and services, except as may be specifically noted otherwise, which are required or necessary to fully complete the Work.

b. The documents are complementary and what is called for in one shall be as binding as if called for in both.

c. Any discrepancies, errors, or omissions found in the Specifications by the Contractor shall be promptly noted and reported to the District Representative who will make a correction in writing. Should the Contractor proceed with the work affected without instruction from the District Representative, the Contractor shall make correct any resulting damage or defect so noted by the District Representative.

d. Finished surfaces in all cases shall conform with the lines, grades, cross-sections, and dimensions shown in the specifications. Deviations from the approved specifications, as may be required by the exigencies of construction will be determined in all cases by the District Representative and authorized in writing.

II.2. Reference to Standards or Publications

Any reference made in the Specifications or Drawings to any specification, standard, or publication of any organization shall, in the absence of a specific designation to the contrary, be understood to refer to the latest edition in effect as the date of the request for bid.

All Work shall be done in accordance with the latest edition of the Standard Specifications for Public Works Construction (Greenbook), except where modified herein.

II.3. Order of Precedence of Contract Documents

a. The order of precedence, which shall be utilized in resolving conflicts in the Contract Documents, shall be as follows:

1. Permits Issued by Other Public Agencies
2. Change Orders
3. Agreement
4. Addenda
5. Contractor's Bid (Bid Schedule)
6. Drawings
7. Technical Specifications
8. Request for Bids
9. Instructions to Bidders
10. General Conditions
11. Referenced District Standard Details
12. District Water Works Standards and Construction Specifications
13. Referenced Standard Specifications

b. The order of precedence for the Drawings is as follows:

1. Figures govern over scaled dimensions
2. Detail drawings govern over general drawings
3. Addenda and change order drawings govern over contract drawings
4. Contract drawings govern over standard drawings

III. DISTRICT-CONTRACTOR RELATIONS

Upon issuance of the Notice to Proceed a District Representative shall be assigned to this Project. The District Representative shall function as the Primary Point of Contact for the Contractor. All shop drawing submittals shall be provided to the District Representative. All requests for clarification shall be addressed to the District Representative.

III.1. District Representative's Authority

a. The District Representative or his authorized representative, will decide all questions which may arise as to the quality and acceptability of materials and equipment furnished, work performed, rate of progress of work, interpretation of the Specifications and all questions as to the acceptable fulfillment of the contract by the Contractor.

b. Subject to the provisions for appeal to the Owner, the District Representative's decision shall be final and he shall have executive authority to enforce and make effective such decisions and orders as the Contractor fails to carry out promptly.

III.2. Responsibility of the District Representative

a. The District Representative shall have full authority to interpret the Specifications and shall determine the amount, quality, and acceptance for the work and supplies to be paid for under the Contract and every question relative to the fulfillment of the terms and provisions therein. Unless otherwise specifically provided in the Specifications, all workmanship, equipment, and materials incorporated in the work are to be new and of the best grade of their respective kinds for the purpose.

b. It shall be the duty of the District Representative to enforce the Specifications in a fair and unbiased manner, although he has the right to waive any term of the Specifications if that term is found to

be unreasonable and inconsistent with the general spirit of the Specifications. If a variation from any requirement is allowed, the District Representative shall grant the same in writing with the reasons for his action outlined, and such actions will not invalidate or change the Contract in any other manner.

c. Any differences which may arise between the Contractor and any other contractors also under the surveillance of the District Representative will be arbitrated by the District Representative.

III.3. Responsibility of Contractor

a. The Contractor shall furnish all transportation, apparatus, ways, works, machinery and plant, and all suitable appliances requisite for the execution of this Contract and shall be solely answerable for same and for the safe and proper and lawful construction, maintenance, and use thereof to the extent permitted by law. The Contractor shall cover and protect the Work from damages and all injury before completion of this Contract shall be made good. The Contractor shall be solely responsible for all the damages to Owner property, to other contractors or other employees or to private or personal property, due to the improper conduct of subcontractors, employees, or agents in and about the site of work, or any undertaking as hereinafter provided or to any defect in the scaffolding, shoring, apparatus, way works, machinery, or plant; and assume the defense and indemnity and hold harmless the Owner and its elected or appointed officials, officers, directors, trustees, employees, and agents free from all claims relating to labor and materials furnished for the work or the invention, patent rights used in or on the Work, or in doing the Work.

b. All risk of loss resulting from total or partial destruction of the Project, or any part or damage prior to the final acceptance of the work by the Owner, to the extent permitted by Public Contract Code Section 7105, shall be borne by Contractor regardless of the cause of such total or partial destruction or damage. Contractor shall repair or replace such damage or destroyed work at Contractor's sole cost and expense, to its prior undamaged condition. Such total or partial destruction or damage shall not excuse Contractor from completion of the Work.

c. Neither the Owner, the District Representative, nor any elected or appointed official, officer, employee, or authorized assistant or agent shall be personally responsible for any liability arising under this Contract.

d. The Owner shall not be held responsible for the care or protection of any materials or parts of the Work prior to final acceptance, except as expressly provided in the Specifications.

e. It is understood and agreed that the Contractor shall act as an independent Contractor in performing work under the Contract, maintaining complete control over all Contractor employees and subcontractors. The Contractor shall perform all work in accordance with its own methods subject to compliance with the Contract. The Contractor shall perform all work diligently and in an orderly and workmanlike manner. Contractor shall observe all applicable State and Federal laws and local ordinances during the execution of Work.

f. The Contractor shall execute and maintain its work so as to avoid injury or damage to any person or property. The Contractor shall comply with the requirements of the Specifications relating to safety measures applicable to similar operations or kinds of work.

g. In carrying out its work, the Contractor shall at all times exercise all necessary precautions for the safety of employees appropriate to the nature of the Work and the conditions under which the Work is to be performed, and be in compliance with all applicable Federal, State and local statutory and regulatory requirements including California Department of Industrial Relations (CAL/OSHA) regulations; and the U.S. Department of Transportation Omnibus Transportation Employee Testing Act.

h. Before the Notice to Proceed will be issued, the Contractor shall submit its proposed construction schedule to the District Representative for approval.

III.4. Right-Of-Way

a. Land or Right-of-Way for the Work to be constructed under the Contract will be provided by the Owner. Nothing contained herein shall be interpreted as giving the Contractor exclusive occupancy of the premises provided for the Work. The Owner and its employees for any purpose, and other contractors of the Owner for any purpose required by their respective contracts, may enter upon or cross the premises or occupy portions of it, as directed or permitted.

b. Except as may otherwise be provided, the Contractor shall secure, from the agencies having jurisdiction the necessary permits to create obstructions, to make excavations, and to otherwise encroach upon Rights-of-Way, and present evidence to the District Representative that such permission has been granted, before work is commenced. The regulations and requirements of all agencies concerned shall be adhered to and no claims for additional compensation will be made for such adherence.

c. Should damages or injury result to any utility pipes, service pipes, structures or poles or their pipes or poles due to fault of the Contractor, for any reason, said Contractor shall without delay repair same at his own expense and to the satisfaction of the District Representative.

III.5. Construction Interferences and Differing Site Conditions

a. If any pipeline, utility, or other structure is required to be disturbed or removed to permit construction of this Project, the written approval of the District Representative must be first obtained followed by notification to the Owner of the utility or structure in question.

b. The owners of any pipeline, utility or structure in obstruction to the Project shall have free access to said pipeline utility or structure at any time during construction for any purpose.

c. It shall be the responsibility of the Contractor to locate any and all utilities, both known and unknown that may be in conflict with this project.

d. Subject to the requirements of Section V.2, any and all cost in removing, relocating, protecting, supporting, repairing, maintaining or replacing utilities or structures shall be borne by the Contractor. The Contractor, therefore, shall be thoroughly familiar, both on the surface and subsurface, with the working area.

e. In the event that dispute arises between the Owner and the Contractor whether the conditions materially differ, or involve hazardous waste (see Section VII.17), or cause a decrease or increase in the Contractor's cost of, or time required for, performance of any part of the work, the Contractor shall not be excused from any scheduled completion date provided for by the Contract, but shall proceed with all work to be performed under the Contract. The Contractor shall retain any and all rights provided either by contract or by law which pertain to the resolution of disputes and protests between the contracting parties.

III.6. Lines and Grades

Except as otherwise noted in the Technical Specifications herein, the Contractor shall be responsible for setting and maintaining lines and grades.

III.7. Job Site Supervision

A qualified superintendent, acceptable to the District Representative, shall supervise the work at all times until its completion. The superintendent shall have full authority to act on behalf of the Contractor, and all directions received by the superintendent from District Representative shall be considered received by the Contractor.

III.8. Protest

If the Contractor considers any work demanded of Contractor to be outside the scope of this Contract, or any order, instruction or decision by the District Representative to be unfair, Contractor shall immediately ask for a written confirmation of the same, whereupon Contractor shall file a written protest with the Owner within (10) ten days clearly stating in detail Contractor's objections and reasons therefore

and proceed without delay to perform the Work. Except for such protest or objections made as required, the Contractor hereby waives all grounds for protest or objections.

III.9. Inspection

a. The District Representative shall, at all times, have access to the Work during its construction and shall be furnished with every reasonable facility for ascertaining that the stock and materials used and employed, and the workmanship are in accordance with the requirements and intentions of the Specifications. All work done and all materials furnished shall be subject to the District's inspection and approval. If any work should be performed or covered up without approval or consent of the District Representative, it must, if required by the District Representative, be uncovered for examination at the Contractors expense.

b. Re-examination of work previously inspected by Owner or District Representative may be ordered by the District Representative and if so ordered, the work must be uncovered by the Contractor. If such work be found in accordance with the Contract, the Owner shall pay the cost of reexamination. If such work be found not in accordance with the Contract, the Contractor shall pay all related costs for reexamination, and required corrective action as required by Owner.

c. The inspection of the Work shall not relieve the Contractor of any of its obligations to fulfill the Contract as prescribed, and defective work shall be made good and unsuitable materials shall be rejected, notwithstanding that such defective work and materials have been previously overlooked and accepted on estimates for payment. All work shall be tested to the satisfaction of the District Representative before acceptance.

d. No work shall be done at night without the prior written approval of the District Representative.

III.10. Assignment Forbidden

The Contractor shall not assign, sublet, sell, transfer, or otherwise dispose of the Contract or any portion thereof, or Contractor's right, title, or interest therein, or its obligations thereunder without prior written consent of the Owner. Should this provision be violated, the Contract may be terminated at the option of the Owner and all obligations and liabilities to the Contractor by the Owner are relieved.

III.11. Subcontracts

a. Subcontractors who will perform one half of one percent, or more, of the work, shall be listed in the Contractor's bid.

b. At the District Representative's discretion, subcontracts may be permitted to such extent as shall be shown to be necessary or advantageous to the Contractor in the execution of the Work and without injury to the Owner's interests. The Contractor shall list all subcontractors who will perform work upon this Project on the form entitled "Information Required of Contractor." There will be no subletting of work by a subcontractor. Proper licensing shall be available to the District Representative from any subcontractor.

c. A copy of each subcontract, either in writing or a written statement signed by both Contractor and subcontractor shall be filed promptly with the District Representative upon his/her request showing name and address of subcontractor and the terms and conditions of each subcontract.

d. The Contractor shall be responsible, as with his own employees, for acts or omissions by the subcontractor.

e. The attention of the Contractor is directed to the provisions of Public Contract Code sections 4100 through 4114, inclusive, regarding subcontracting and said provisions are by this reference incorporated herein and made a part hereof.

f. Each subcontract shall contain a suitable provision for the suspension or termination thereof should the work be suspended or terminated or should the subcontractor neglect or fail to conform to every

provision of the Contract Documents insofar as such provisions are relevant. No subcontractor or supplier will be recognized as such, and all persons engaged in work will be considered as employees of the Contractor and the Contractor will be held responsible for their work, which shall be subject to the provisions of the Contract Documents. The Contractor shall be fully responsible to the District for the acts or omissions of its subcontractors and the persons either directly or indirectly employed thereby. Nothing contained in the Contract Documents shall create any contractual relationship between any subcontractor and the District. If a legal action, including arbitration and litigation, against the District is initiated by a subcontractor or supplier, the Contractor shall reimburse the District for the amount of legal, District Representative time, and all other expenses incurred by the District in defending itself in said action.

g. The District reserves the right to approve all subcontractors. Such approval shall be a consideration to the awarding of the Contract and unless notification to the contrary is given to the Contractor prior to the signing of the Contract, the list of subcontractors which is submitted with Contractor's bid will be deemed to be acceptable.

III.12. Suspension of Work

The Owner, acting through the District Representative, may, at any time and without cause, suspend the Work or any portion thereof for a period of not more than 90 days by notice in writing to the Contractor. The Contractor shall resume the work on receipt from the District Representative of a notice of resumption of work. The Contractor will be allowed an increase in the Contract Price or an extension of the Contract Time, or both, directly attributable to any suspension if the Contractor makes an approved claim as provided in the General Conditions.

III.13. Termination of Right To Proceed

a. Should the Contractor fail to meet any or all of the requirements of the Contract, be placed or entered into bankruptcy, have a receiver appointed for his properties or make an assignment for the benefit of creditors, the Owner may declare the Contractor in default of Contract by notifying the Contractor in writing. The Contractor shall preserve all aspects of the project site and take immediate steps to remedy such default.

b. If after five (5) calendar days said default is not remedied, the Owner may, in writing terminate the Contractor's right to proceed and the Contractor shall at its own expense:

i. Assist the Owner in making an inventory of all materials and equipment in storage at the site, en route, in storage or manufacture away from the site, or on order;

ii. Assign all subcontractors, supply contracts and equipment rental agreements to the Owner; and

iii. Remove all material, equipment and plant not listed in said inventory.

c. The Owner has the right to complete the Work using any or all the materials, plant, tools, equipment, supplies and property furnished by the Contractor. The total cost of completing the Project shall be charged to the Contractor and the Owner may use sole judgment in gathering figures for the completion of the Work.

III.14. Termination of Agreement by Owner (For Convenience)

a. The Owner may terminate the Contract at any time if it is found that reasons beyond the control of either the Owner or Contractor make it impossible or against the Owner's interests to complete the Work. In such a case, the Contractor shall have no claims against the Owner except for the value of work performed up to the date the Contract is terminated and for the cost of materials and equipment on hand, in transit, or on definite commitment, as of the date the Contract is terminated, which would be needed in the work and which meet the requirement of the Contract Documents.

b. The value of the work performed and the cost of materials and equipment delivered to the site, as mentioned above, will be determined by the District Representative in accordance with the procedure prescribed for the making of the final application for payment.

c. The Contractor shall assign to the Owner, as directed by the District Representative, all right, title, and interest to the Contractor under the subcontracts terminated, in which case the Owner shall have the right to settle or to pay any termination settlement arising out of those terminations.

d. As directed by the District Representative, the Contractor shall transfer title and deliver to the Owner (i) the fabricated or unfabricated parts, work in progress, completed work, supplies, and other material produced or acquired for the work terminated, and (ii) the completed or partially completed plans, drawings, information, and other property that, if the contract has been completed, would be required to be furnished to the Owner.

III.15. Failure To Comply

If the Contractor should refuse or neglect to comply with the provisions of the Contract or of the orders of the District Representative, the Owner may have such provisions or orders carried out by others at the Contractor's expense.

IV. MATERIALS AND WORKMANSHIP

IV.1. Safeguarding of Equipment, Materials, and Work

The Contractor shall properly safeguard all equipment, materials and work against loss, damage, malicious mischief, or tampering by unauthorized persons until final written acceptance by the Owner.

IV.2. Defective Work or Material

a. The Contractor shall promptly remove from the Owner’s premises all work and materials rejected by the District Representative as failing to conform to the Contract, whether incorporated or not, and the Contractor shall promptly replace and re-execute the work in accordance with the Contract and without expense to the Owner and shall bear the expense of correcting all work of other contractors destroyed or damaged by such removal or replacement.

b. If the Contractor does not remove such rejected work or materials within a reasonable time after notice, the Owner may remove them and store the materials at the expense of the Contractor. If the Contractor does not pay the expenses of such removal within ten (10) days' time after such removal, the Owner may, upon thirty (30) days written notice, sell such materials at auction or at private sale and shall account for the net proceeds thereof after deducting all the cost and expenses that should have been borne by the Contractor.

c. Any work done beyond the lines and grades shown on the plans and established by the District Representative, or any extra work done without written authority, will be considered as unauthorized work and will not be paid for.

IV.3. Contractor’s Utilities

a. The Contractor shall provide his own water, telephone and all electric power required in performance of the work under the Contractor, unless otherwise specified or authorized by the Contract or the District Representative.

b. Chemical toilets for the use of all persons employed on the Work shall be provided by the Contractor in sufficient number, and in such manner and at such places as shall be approved by the District Representative. The fixtures and the surrounding premises shall be kept in a clean sanitary condition.

IV.4. Cleanup and Dust Control

a. During construction, the Contractor shall keep the site free and clean from all rubbish, debris, and shall clean up the site promptly when notified to do so by the District Representative. Care shall be taken to prevent spillage on streets and access roads over which hauling is done, and any such spillage or debris deposited on streets and access roads due to the Contractor's operations, shall be immediately cleaned up.

b. The Contractor shall, at his own expense, maintain the streets and access roads free from dust and mud, excess earth or debris. If any streets or access roads are damaged by the Contractor as a result of its operations, Contractor shall be responsible for repairing such damaged street or access road to their original condition.

c. Upon completion of any resurfacing or excavation, the street or access road shall be immediately swept clean of all dust and debris. Sweeping shall be done at such times and in such a manner as to minimize creation of dust.

d. The Contractor shall coordinate its operations in such a manner as to prevent the amount of cleanup and completion of back work from becoming excessive. Should said condition arise, the District Representative may halt all operations and order all or portions of back work to be completed before continuing.

e. The Contractor shall leave all work site in a neat, presentable appearance at the end of each workday.

IV.5. Public Convenience and Safety

The Contractor shall so conduct its operations as to cause the least possible obstruction and inconvenience to public traffic. The Contractor shall furnish, erect, and maintain such fences, barriers, lights, and signs as are necessary to give adequate warning to the public at all times that the improvement is under construction and of any dangerous conditions to be encountered as a result thereof, and Contractor shall also erect and maintain such warnings and directional signs as may be furnished by the Owner. Full compensation for conforming to the provisions of this subsection shall be considered as included in the prices paid for the various contract items of work and no additional compensation will be allowed therefore. Contractor shall be in compliance with all County, State, and Federal ordinances, or laws at all times.

V. PROGRESS AND PAYMENT

V.1. Changes in the Work

The District may, at any time, by written order make changes in the Work as deemed necessary by the District Representative. If such changes cause an increase or decrease in the Contractor's cost of, or time required for, performance of the Contract an equitable adjustment will be made and the Contract modified in writing accordingly.

Such modification will be in the form of a Contract Change Order which will set forth the work to be done or the method by which the change and cost adjustment, if any, will be determined, and the time of completion of the Work. A Contract Change Order Form is attached to these Contract Documents.

The compensation to be paid for extra work or change shall be determined in one or more of the following ways:

- By agreed unit prices;
- By estimate and acceptance of an agreed upon lump sum; or
- By agreed upon cost plus.

Until one of the above methods is agreed on in writing by the parties, or if the Work is to be paid for on a cost plus basis, the Contractor shall keep full and complete records of the cost of such work in the form and manner prescribed by the District Representative and shall permit the District Representative to have access to such records as may be necessary to assist in the determination of the compensation

payable for such work. Contractor must obtain the District Representative's permission, on a daily basis, as to the size of the crew, hours worked, and material to be used.

Upon receipt of a Contract Change Order, the Contractor shall proceed with the ordered work. If ordered in writing by the District Representative, the Contractor shall proceed with the work so ordered prior to actual receipt of a Contract Change Order. A Contract Change Order executed by the Contractor and approved by the District Representative is an executed Contract Change Order as that term is used throughout this Section. A Contract Change Order may be issued to the Contractor at any time. Should the Contractor disagree with any terms or conditions set forth in a Contract Change Order which Contractor has not executed, Contractor shall submit a written protest to the District Representative within ten (10) days after the receipt of such Contract Change Order. The protest shall state the points of disagreement, and, if possible, the quantities and cost involved. If a written protest is not submitted, payment will be made as set forth in the Contract Change Order and such payment will constitute full compensation for all work included therein or required thereby. Such unprotested Contract Change Orders will be considered as executed Contract Change Orders.

Where the protest concerning a Contract Change Order relates to compensation, the compensation payable for all work specified or required by said Contract Change Order to which such protest relates will be determined in the same manner as provided in Section V.2 for claims for extra work. The Contractor shall keep full and complete records of the cost of such work and shall permit the District Representative to have such access thereto as may be necessary to assist in the determination of the compensation payable for such work.

Where the protest concerning a Contract Change Order relates to the adjustment of time and the completion of the Work, the time to be allowed therefore will be determined as provided in this Section.

The consent of the Contractor's sureties shall not be required as to any change or extra work, and the liability of the Contractor's Bonds shall be increased or decreased accordingly without notice to the sureties.

In accordance with Government Code Section 4215, the Contractor shall be compensated for the costs of locating, repairing damage not due to the failure of the Contractor to exercise reasonable care, and removing or relocating existing main or trunk line utility facilities not indicated in the Contract Plans and Specifications with reasonable accuracy, and for the equipment on the project necessarily idled during such work; provided that the Contractor shall first notify the District Representative before commencing work on locating, repairing damage to, removing, or relocating such utilities.

V.2. Claims for Extra Cost

a. It is hereby mutually agreed that the Contractor shall not be entitled to the payment of any additional compensation for any cause, including any act, or failure to act, by the District Representative, or the happening of any event, thing, or occurrence, unless he shall have given the District Representative due written notice of potential claims hereinafter specified, provided, however, that compliance with this Section shall not be a prerequisite as to matters within the scope of the protest provisions in Section III.8.

b. The written notice of potential claims shall set forth the reasons for which the Contractor believes additional compensation will or may be due, the nature of the costs involved, and insofar as possible, the amount of the potential claim. The notice as above required shall be given to the District Representative prior to the time that the Contractor commences performance of the work giving rise to the potential claim for additional compensation, if based on an act or failure to act by the District Representative, or in all other cases within ten (10) days after the happening of the event, thing or occurrence giving rise to the potential claim.

c. The Contractor may submit a claim to the District Representative concerning any matter for which a protest under Section III.8 or a notice of potential claim is filed within sixty (60) days following the submission of said protest or notice, unless, due to the nature of the claim or the uncompleted state of the

work, it is impracticable to determine the amount or the extent of the claim within such period, in which case a claim may be submitted at the earliest time thereafter that such determination can be made, but in no event later than the final release by the Contractor. The claims shall set forth clearly and in detail, for each item of additional compensation claimed, the reasons for the claim, reference to applicable provisions of the Specifications, the nature and the amount of the cost involved, the computations used in determining such costs, and all pertinent factual data. The Contractor shall maintain complete and accurate records of the cost or any portion of the work for which additional compensation is claimed, and shall provide the District Representative with copies thereof, as required.

d. The District Representative will, within a reasonable time after submission of the Contractor's claim, make decisions in writing on all claims of the Contractor. All such decisions of the District Representative shall be final unless the Contractor shall within ten (10) days after receipt of the District Representative's decision, file with the District Representative a written protest, stating clearly and in detail the basis thereof. Such protest will be forwarded promptly by the District Representative to the District, which will issue a decision upon each such protest, and the District's decision will be final. Pending such decision, the Contractor shall proceed with its work in accordance with the determination or instructions of the District Representative. It is hereby agreed that the Contractor's failure to protest the District Representative's determination or instructions, within ten (10) days from and after the District Representative's determinations or instructions, shall constitute a waiver by the Contractor of all its rights to further protest, judicial or otherwise.

e. It is the intention of this Section that the differences between the parties, arising under and by virtue of the Contract, be brought to the attention of the District Representative at the earliest possible time in order that such matters may be settled, if possible or other appropriate action promptly taken. The Contractor hereby agrees that it shall have no right to additional compensation for any claim that may be based on any act, failure to act, event, thing, or occurrence for which no written notice of potential claim as herein required was timely filed.

f. In the event of an emergency endangering life or property, the Contractor shall act under the direction of the Owner, and after execution of the emergency work shall present an accounting of labor, materials, and equipment in connection therewith. The procedure for any payment that may be due for emergency work will be as specified in Section V.2 herein.

g. Right to Audit: If the Contractor submits a claim to the Owner for additional compensation, the Owner shall have the right, as a condition to considering the claim, and as a basis for evaluation of the claim, and until the claim has been settled, to audit the Contractor's books to the extent they are relevant. This right shall include the right to examine books, records, documents, and other evidence and accounting procedures and practices, sufficient to discover and verify all direct and indirect costs of whatever nature claimed to have been incurred or anticipated to be incurred and for which the claim has been submitted. The right to audit shall include the right to inspect the Contractor's plans, or such parts thereof, as may be or have been engaged in the performance of the work. The Contractor further agrees that the right to audit encompasses all subcontracts and is binding upon subcontractors. The rights to examine and inspect herein provided for shall be exercisable through such representatives as the Owner deems desirable during the Contractor's normal business hours at the office of the Contractor. The Contractor shall make available to the Owner for auditing, all relevant accounting records and documents, and other financial data, and upon request, shall submit true copies of requested records to the Owner.

V.3. Overtime Work

Except as otherwise provided in this Section, the Contractor shall receive no additional compensation for overtime work even though such overtime work may be required under emergency conditions and may be ordered by the District Representative in writing. Additional compensation will be paid to the Contractor for over-time work only in the event extra work is ordered by the District Representative in writing and the Change Order specifically authorizes the use of overtime work, and then

only to such extent as overtime wages are regularly being paid by the Contractor for overtime work of a similar nature in the same locality.

V.4. Delays and Extension of Contract Time

a. Any extension of Contract Time must be requested in writing by the Contractor. The Contractor may be entitled to an extension of Contract Time: (1) if the Work has been suspended by the Owner, in whole or in part of (2) where weather or other circumstances occur which delay progress and which are clearly beyond the control of the Contractor; provided that; in either case, the Contractor is not at fault and has not breached the terms of the Contract. The Contractor has sole responsibility for its subcontractor's timely completion of work. The extension of time allowed shall be as determined by the District Representative.

b. The Owner shall have the right to extend the time for completing the work if it determines such extension to be in the best interest of the Owner; however, if the Owner extends the time limit for the completion of the Work, by way of a Change Order, at the request of the Contractor, for other than acts of God and situations beyond the control of both parties, it is understood and agreed that such time extension will increase the Owner financial obligations incurred for District Representative, inspection, supervision, incidental and overhead expenses that are directly chargeable to the Contract and that accrue during the period of extension. Therefore, the Contractor does hereby acknowledge that reasonable charges for the hereinabove Owner expense shall be reimbursed to the Owner by the Contractor before the final payment of the 15 percent retention.

c. The Contractor shall within ten (10) calendar days from the beginning of any such delay (unless the Owner shall grant a further period of time to the date of final settlement of the Contract) notify the Owner in writing of the cause of delay, whereupon the Owner shall ascertain the facts and extent of the delay and extend the time for completing the Work if in its judgment the findings of fact justify such an extension, and its findings of fact thereon shall be final and conclusive on the parties hereto. In addition, the District shall have the right to charge to the Contractor and to deduct from the final or progress payments for the Work the actual cost to the District of legal, inspection, superintendence, and other expenses, which are directly chargeable to the Contract and which accrue during the period of such delay, except that the cost of final inspection and preparation of the final estimate shall not be included in the charges.

V.5. Final Inspections

Final inspection and written acceptance of the Work shall be made by the District. Such inspection shall be made as soon as practical after the Contractor has notified the Owner that the work is ready for such inspection.

V.6. Progress Payments and Final Payment

a. Progress payments will be made as described in the Technical Specifications.

b. Upon receipt by the District Representative of the Contractor's written approval of each payment estimate, the District Representative will certify physical completion of each bid item to the Owner, will recommend acceptance of the Work, and will recommend payment to the Contractor of eighty-five percent (85%) of the final estimate. Payment recommendations for each Bid Item and final payment will be made by the District subsequent to the date of the written approval of each payment estimate.

c. Thirty-five (35) calendar days after filing of the Notice of Completion, the Owner will pay to the Contractor the amount remaining after deduction of all prior payments and all amounts to be kept or retained under the provisions of the Contract to satisfy claims by others.

d. If the Contractor disagrees with the District Representative's final estimate and files a written statement of his claims, the District Representative will issue, as a semi-final estimate, the proposed estimate submitted to the Contractor, and the Owner will make payment to the Contractor, in accordance

with this Subsection. The District Representative will then investigate the Contractor's claims, make any revisions to said semifinal estimates as he/she deems appropriate, and certify in writing to the Owner the amount and value of the work performed by the Contractor. The Owner will then make final payment to the Contractor.

V.7. Final Payment Terminates Liability of Owner

The acceptance by the Contractor of the final payment made under the terms of the Contract shall operate as, and shall be, a release to the Owner and its agents from all Claims of and/or liability to the Contractor for anything done or furnished for, or in relation to, the Work or for any act or neglect of the Owner or any person related to or affecting the Work, except for claims previously made in writing and identified as disputed by the Contractor at the time of the Contractor's request for final payment.

V.8. Risk of Loss Prior to Final Acceptance

Except as set forth herein above relating to acts of God, all risk or loss from total or partial destruction of the Work, or any part thereof, or any damage thereto, prior to final acceptance of the Work by Owner, shall be borne by Contractor regardless of the cause of such total or partial damage or destruction. Contractor shall repair or replace such damages or destroyed property, at Contractor's sole cost, to its prior undamaged condition before being entitled to additional progress payments or final payment. Such total or partial destruction or damage shall not excuse Contractor from completion of the Work in accordance with the provisions of the Contract.

V.9. Right to Withhold Payments

a. In addition to all other rights and remedies of the District hereunder and by virtue of the law, the District may withhold or nullify the whole or any part of any partial or final payment to such extent as may reasonably be necessary to protect the District from loss on account of:

(1) Defective work not remedied, irrespective of when any such work was found to be defective;

(2) Claims or liens filed or reasonable evidence indicating probable filing of claims or liens including, but not limited to claims under Sections 1775, 1776, or 1777.7 of the Labor Code;

(3) Failure of the Contractor to make payments properly for labor, materials, equipment or other facilities, or to subcontractors and/or suppliers;

(4) A reasonable doubt that the work can be completed for the balance then unearned;

(5) A reasonable doubt that the Contractor will complete the Work within the agreed time limits;

(6) Costs to the District resulting from failure of the Contractor to complete the Work within the proper time;

(7) Damage to work or property.

b. Whenever the District shall, in accordance herewith, withhold any monies otherwise due the Contractor, written notice of the amount withheld and the reasons therefore will be given the Contractor. After the Contractor has corrected the enumerated deficiencies, the District will promptly pay to the Contractor the amount so withheld. When monies are withheld to protect the District against claims or liens of mechanics, material suppliers, subcontractors, etc., the District may at its discretion permit the Contractor to deliver a surety bond in terms and amount satisfactory to the District, indemnifying the District against any loss or expense, and upon acceptance thereof by the District, the District shall release to the Contractor monies so withheld.

V. 10. Unpaid Claims

If, at any time prior to the expiration of the period for service of a stop notice, there is served upon the Owner a stop notice as provided in Sections 3183 and 3210 of the California Civil Code, pursuant to

Section 3186 of the California Civil Code, the Owner shall, until the discharge thereof, withhold from the monies under its control so much of said monies due or to become due to the Contractor under this Contract as shall be sufficient to answer the claim stated in such stop notice and to provide for the reasonable cost of any litigation thereunder; provided, that if the District Representative shall, in its discretion, permit Contractor to file with the Owner the bond referred to in Section 3196 of the Civil Code of the State of California, said monies shall not thereafter be withheld on account of such stop notice.

VI. 11. Claim Resolution – AB 626 [PCC 9204]

(a) California lawmakers have found and declared that it is in the best interests of the state and its citizens to ensure that all construction business performed on a public works project in the state that is complete and not in dispute is paid in full and in a timely manner.

(b) Notwithstanding any other law, including, but not limited to, California Public Contract Code, Article 7.1 (commencing with Section 10240) of Chapter 1 of Part 2, Chapter 10 (commencing with Section 19100) of Part 2, and Article 1.5 (commencing with Section 20104) of Chapter 1 of Part 3, this Section shall apply to any claim by a contractor in connection with a public works project.

(c) For purposes of this Section:

(1) "Claim" means a separate demand by a contractor sent by registered mail or certified mail with return receipt requested, for one or more of the following:

(A) A time extension, including, without limitation, for relief from damages or penalties for delay assessed by a public entity under a contract for a public works project.

(B) Payment by the public entity of money or damages arising from work done by, or on behalf of, the contractor pursuant to the contract for a public works project and payment for which is not otherwise expressly provided or to which the claimant is not otherwise entitled.

(C) Payment of an amount that is disputed by the public entity.

(2) "Contractor" means any type of contractor within the meaning of Chapter 9 (commencing with Section 7000) of Division 3 of the Business and Professions Code who has entered into a direct contract with a public entity for a public works project.

(3)(A) "Public entity" means, without limitation, except as provided in subparagraph (B), a state agency, department, office, division, bureau, board, or commission, the California State University, the University of California, a city, including a charter city, county, including a charter county, city and county, including a charter city and county, district, special district, public authority, political subdivision, public corporation, or nonprofit transit corporation wholly owned by a public agency and formed to carry out the purposes of the public agency.

(B) "Public entity" shall not include the following:

(i) The Department of Water Resources as to any project under the jurisdiction of that department.

(ii) The Department of Transportation as to any project under the jurisdiction of that department.

(iii) The Department of Parks and Recreation as to any project under the jurisdiction of that department.

(iv) The Department of Corrections and Rehabilitation with respect to any project under its jurisdiction pursuant to Chapter 11 (commencing with Section 7000) of Title 7 of Part 3 of the Penal Code .

(v) The Military Department as to any project under the jurisdiction of that department.

(vi) The Department of General Services as to all other projects.

(vii) The High-Speed Rail Authority.

(4) "Public works project" means the erection, construction, alteration, repair, or improvement of any public structure, building, road, or other public improvement of any kind.

(5) "Subcontractor" means any type of contractor within the meaning of Chapter 9 (commencing with Section 7000) of Division 3 of the Business and Professions Code who either is in direct contract with a contractor or is a lower tier subcontractor.

(d)(1)(A) Upon receipt of a claim pursuant to this Section, the public entity to which the claim applies shall conduct a reasonable review of the claim and, within a period not to exceed forty-five (45) business days, shall provide the claimant a written statement identifying what portion of the claim is disputed and what portion is undisputed. Upon receipt of a claim, a public entity and a contractor may, by mutual agreement, extend the time period provided in this subdivision.

(B) The claimant shall furnish reasonable documentation to support the claim.

(C) If the public entity needs approval from its governing body to provide the claimant a written statement identifying the disputed portion and the undisputed portion of the claim, and the governing body does not meet within the 45 days or within the mutually agreed to extension of time following receipt of a claim sent by registered mail or certified mail, return receipt requested, the public entity shall have up to three days following the next duly publicly noticed meeting of the governing body after the 45-day period, or extension, expires to provide the claimant a written statement identifying the disputed portion and the undisputed portion.

(D) Any payment due on an undisputed portion of the claim shall be processed and made within 60 days after the public entity issues its written statement. If the public entity fails to issue a written statement, paragraph (3) shall apply.

(2)(A) If the claimant disputes the public entity's written response, or if the public entity fails to respond to a claim issued pursuant to this section within the time prescribed, the claimant may demand in writing an informal conference to meet and confer for settlement of the issues in dispute. Upon receipt of a demand in writing sent by registered mail or certified mail, return receipt requested, the public entity shall schedule a meet and confer conference within thirty (30) business days for settlement of the dispute.

(B) Within ten (10) business days following the conclusion of the meet and confer conference, if the claim or any portion of the claim remains in dispute, the public entity shall provide the claimant a written statement identifying the portion of the claim that remains in dispute and the portion that is undisputed. Any payment due on an undisputed portion of the claim shall be processed and made within sixty (60) business days after the public entity issues its written statement. Any disputed portion of the claim, as

identified by the contractor in writing, shall be submitted to nonbinding mediation, with the public entity and the claimant sharing the associated costs equally. The public entity and claimant shall mutually agree to a mediator within ten (10) business days after the disputed portion of the claim has been identified in writing. If the parties cannot agree upon a mediator, each party shall select a mediator and those mediators shall select a qualified neutral third party to mediate with regard to the disputed portion of the claim. Each party shall bear the fees and costs charged by its respective mediator in connection with the selection of the neutral mediator. If mediation is unsuccessful, the parts of the claim remaining in dispute shall be subject to applicable procedures outside this section.

(C) For purposes of this Section, mediation includes any nonbinding process, including, but not limited to, neutral evaluation or a dispute review board, in which an independent third party or board assists the parties in dispute resolution through negotiation or by issuance of an evaluation. Any mediation utilized shall conform to the timeframes in this section.

(D) Unless otherwise agreed to by the public entity and the contractor in writing, the mediation conducted pursuant to this section shall excuse any further obligation under California Business and Professions Code Section 20104.4 to mediate after litigation has been commenced.

(E) This Section does not preclude a public entity from requiring arbitration of disputes under private arbitration or the Public Works Contract Arbitration Program, if mediation under this section does not resolve the parties' dispute.

(3) Failure by the public entity to respond to a claim from a contractor within the time periods described in this subdivision or to otherwise meet the time requirements of this section shall result in the claim being deemed rejected in its entirety. A claim that is denied by reason of the public entity's failure to have responded to a claim, or its failure to otherwise meet the time requirements of this section, shall not constitute an adverse finding with regard to the merits of the claim or the responsibility or qualifications of the claimant.

(4) Amounts not paid in a timely manner as required by this section shall bear interest at seven (7) percent per annum.

(5) If a subcontractor or a lower tier subcontractor lacks legal standing to assert a claim against a public entity because privity of contract does not exist, the contractor may present to the public entity a claim on behalf of a subcontractor or lower tier subcontractor. A subcontractor may request in writing, either on his or her own behalf or on behalf of a lower tier subcontractor, that the contractor present a claim for work which was performed by the subcontractor or by a lower tier subcontractor on behalf of the subcontractor. The subcontractor requesting that the claim be presented to the public entity shall furnish reasonable documentation to support the claim. Within forty-five (45) business days of receipt of this written request, the Contractor shall notify the subcontractor in writing as to whether the Contractor presented the claim to the public entity and, if the original Contractor did not present the claim, provide the subcontractor with a statement of the reasons for not having done so.

(e) The text of this Section or a summary of it shall be set forth in the plans or specifications for any public works project that may give rise to a claim under this Section.

(f) A waiver of the rights granted by this Section is void and contrary to public policy, provided, however, that (1) upon receipt of a claim, the parties may mutually agree to waive, in writing, mediation and proceed directly to the commencement of a civil action or binding arbitration, as applicable; and (2) a public entity may prescribe reasonable change order, claim, and dispute resolution procedures and

requirements in addition to the provisions of this section, so long as the contractual provisions do not conflict with or otherwise impair the timeframes and procedures set forth in this section.

(g) This Section applies to contracts entered into on or after January 1, 2017.

(h) Nothing in this Section shall impose liability upon a public entity that makes loans or grants available through a competitive application process, for the failure of an awardee to meet its contractual obligations.

(i) This Section shall remain in effect only until January 1, 2027, and as of that date is repealed, unless a later enacted statute that is enacted before January 1, 2027, deletes, or extends that date.

VI. BONDS, INSURANCE, LEGAL RESPONSIBILITY, AND PUBLIC SAFETY

VI.1. Bonds

The Contractor shall file Payment and Performance Bonds approved by the District in conformance with Chapter 7 of the California Civil Code if the Contract amount is in excess of $25,000.

VI.2. Insurance

a. The Contractor shall not commence work under this Contract until obtaining all the insurance for the coverages and limits required under this Section and such insurance has been approved by the Owner, nor shall the Contractor allow any subcontractor to commence work on a subcontract until the insurance required of the subcontractor has been so obtained and approved in writing by the District.

Contractor shall procure and maintain for the duration of the Contract, insurance against claims for injuries to persons or damages to property which may arise from or in connection with the performance of the Work hereunder by the Contractor, its agents, representatives, employees or subcontractors. The cost of such insurance shall be included in the Contractor's bid.

b. Coverage shall be at least as broad as:

i. Insurance Services Office form number GL0002 (Ed. 1/73) covering Commercial General Liability and Insurance Services Office form number GL0404 covering Broad Form Comprehensive General Liability; or Insurance Services Office Commercial General Liability coverage ("occurrence" form CG 0001).

ii. Insurance Services Office form number CA 0001 (Ed. 1/78) covering Automobile Liability, code 1 "any auto" and endorsement CA 0025.

iii. Workers' Compensation insurance as required by the Labor Code of the State of California and Employers Liability insurance.

c. Contractor shall maintain limits no less than:

i. Comprehensive General Liability: $1,000,000 combined single limit per occurrence for bodily injury and property damage.

ii. Automobile Liability: $1,000,000 combined single limit per accident for bodily injury and property damage.

iii. Workers' Compensation and Employers Liability: Workers' compensation limits as required by the Labor Code of the State of California and Employers Liability limits of $1,000,000 per accident.

d. Any deductibles or self-insured retentions must be declared to and approved in writing by the District. At the option of the District, either: the insurer shall reduce or eliminate such deductibles or self-

insured retentions as respects the District, its elected officials, trustees, agents and employees; or the Contractor shall procure a bond guaranteeing payment of losses and related investigations, claim administration and defense expenses.

e. The policies are to contain, or be endorsed to contain, the following provisions:

i. Commercial General Liability and Automobile Liability Coverages

(a) The District, District Representative, and District's elected and appointed officials, directors, trustees, officers, agents, and employees are to be given insured status as respects: liability arising out of activities performed by or on behalf of the Contractor; products and completed operations of the Contractor; premises owned, leased or used by the Contractor; or automobiles owned, leased hired or borrowed by the Contractor. The coverage shall contain no special limitations on the scope of protection afforded to the District, District Representative, and District's elected and appointed officials, directors, trustees, officers, agents, and employees.

(b) The Contractor's insurance coverage shall be primary insurance as respects the District, District Representative, and District's elected and appointed officials, directors, trustees, officers, agents, and employees. Any insurance or self-insurance maintained by the District shall be in excess of the Contractor's insurance and shall not contribute with it.

(c) Any failure to comply with reporting provisions of the policies shall not affect coverage provided to the District, District Representative, and District's elected and appointed officials, directors, trustees, officers, agents, and employees.

(d) Coverage shall state that the Contractor's insurance shall apply separately to each insured against whom claim is made or suit is brought, except with respect to the limits of the insurer's liability.

ii. All Coverages

(a) The insurer shall agree to waive all rights of subrogation against the District, District Representative, and District's elected and appointed officials, directors, trustees officers, agents, and employees for losses arising from work performed by the Contractor for the District.

(b) Each insurance policy required by this clause shall be endorsed to state that coverage shall not be suspended, voided, canceled, reduced in coverage or in limits except after thirty (30) business days' prior written notice by certified mail, return receipt requested, has been given to the District.

f. Insurance is to be placed with insurers with a Best rating of no less than A-:VII or as otherwise approved by the District, with the exception of the Worker's Compensation and Employer's Liability insurer who must have a rating of no less than B++:VII or as otherwise approved by the District (State Fund is an approved insurer).

g. The insurance hereinbefore specified shall be carried until all Work required to be performed under the terms of the Contract is satisfactorily completed as evidenced by the formal acceptance by the Owner.

h. Contractor shall cause its insurance carrier to issue an endorsement naming the Owner as an additional insured for the duration of Work performed under this Contract.

i. At the Owner's request, the Contractor shall furnish the District Representative with one (1) certified copy of each of the executed policies required by this Section VI.2. The copy of each policy shall include each and every cover page, form, schedule, endorsement and other document which is a part of the policy.

j. The insurance herein required shall be obtained by the Contractor and the certified copies of the policies furnished as herein provided, within the time fixed herein for his execution of the Contract.

k. Full compensation for all premiums which the Contractor and the subcontractors are required to pay on all the insurance described above shall be considered as included in the prices paid for the various items of work to be performed under the Contract, and no additional allowance will be made therefore or for additional premiums which may be required by extension of the policies of insurance.

l. The Contractor shall procure and maintain Worker's Compensation Insurance as required by applicable State or territorial law for all of his employees to be engaged in work at the site of the Project under this Contract, in case of any such work sublet, the Contractor shall require the subcontractor similarly to provide Worker's Compensation Insurance for all of the latter's employees to be engaged in such work unless such employees are covered by the protection afforded by the Contractor's Worker's Compensation Insurance. In case any class of employees engaged in hazardous work on the Project under this Contract is not protected under the Worker's Compensation Statute, the Contractor shall provide and shall cause each subcontractor to provide adequate employer's liability insurance for the protection of such of his employees as are not otherwise protected.

m. The Contractor shall furnish the Owner with certificates of insurance showing the type, amount, class of operations covered, effective dates and date of expiration of policies. The certification on such copies shall guarantee that the policy will not be amended, altered, modified, or canceled insofar as the coverage contemplated under the Contract Documents is concerned, without at least thirty (30) days' notice mailed by registered mail to the Owner. Such certificates shall also contain substantially the following statement: "The insurance covered by this certificate will not be canceled or materially altered, except after thirty (30) business days' written notice by registered mail to the Owner."

VI.3. Indemnification

The Contractor shall defend, indemnify, protect, and hold the Owner, District Representative, and District's elected and appointed officials, directors, trustees, agents, officers, and employees harmless from and against any and all liabilities, claims, costs, expenses, losses, damages and fees established, asserted, or incurred, including but not limited to, attorneys' paralegal and expert fees, costs and expenses, which arise out of, relate to, or result from, the Work, the Contract, the Agreement, and any and all documents prepared and/or services performed in connection therewith, as well as the failure, neglect, or refusal of the Contractor and/or its subcontractors, subconsultants, agents, officers, or employees to perform the Work and/or any other obligations of the Contractor under the Contract Documents, and/or the documents prepared in connection therewith. This indemnification shall include, but not be limited to, the costs, expenses, and damages incurred by the Owner and/or District Representative to defend any such claims, stop notices, or lawsuits, to which the Owner and/or District Representative are made a party.

VI.4. Liens or Claims

If at any time there shall be evidence of any lien or claim for which the Owner might become liable and which is chargeable to the Contractor, the Owner shall have the right to retain out of any payment then due or thereafter to become due, an amount sufficient for complete indemnification against such lien or claim. If the Owner has already paid to the Contractor all sums due under this contract or if the balance remaining unpaid is insufficient to protect the Owner, the Contractor and his surety shall be liable to the Owner for any loss sustained.

VI.5. Safety and Convenience

a. The Contractor shall at all times conduct its work so as to insure the least possible obstruction to traffic and inconvenience to the general public, and adequate protection of persons and property in the vicinity of the work. No street shall be closed to the public without first obtaining permission of the District Representative and proper governmental authority.

b. The Contractor shall provide and maintain adequate barricades, signs, warning lights, watchmen, and flagmen as required, in the opinion of the District Representative and Owner having jurisdiction, to protect the work and the safety of the public. Warning lights using inflammable liquids will not be permitted; only electrically operated warning lights will be approved for use. Warning lights shall be kept activated from sunset to sunrise, and barricade shall be painted to increase their visibility at night.

c. The Contractor shall secure any open trench by covering the trench at the end of each day's work.

d. The Contractor shall be solely and completely responsible for the conditions of the job site, including safety of all persons and property during performance of the Work. This requirement shall apply continuously and not be limited to normal working hours. Safety provisions shall conform to all applicable Federal, State, and local laws, ordinances, and codes, and to the rules and regulations established by the California Occupational Safety and Health Administration, and to other rules of law applicable to the Work.

e. The services of the District Representative in conducting construction review of the Contractor's performance is not intended to include review of the adequacy of the Contractor's work methods, equipment, bracing or scaffolding or safety measure, in, on, or near the construction site, and shall not be construed as supervision of the actual construction nor make the District Representative or the District responsible for providing a safe place for the performance of work by the Contractor, subcontractors, or suppliers, or for access, visits, use, work, travel, or occupancy by any person.

f. The Contractor shall carefully instruct all personnel working in potentially hazardous work areas as to potential dangers and shall provide such necessary safety equipment and instruction as is necessary to prevent injury to personnel and damage to property. Special care shall be exercised relative to electrical work, work involving excavation, and in pump sump work.

g. Nothing in this Contract is to be construed to permit work not conforming to governing law. When Contract Documents differ from governing law, the Contractor shall furnish and install the higher standards called for without extra charge. All equipment furnished shall be grounded and provided with guards and protection as required by safety codes. Where vapor-tight or explosion-proof electrical installation is required by law, this shall be provided.

VII. STATUTORY REQUIREMENTS

VII.1 State Wage Determinations

a. As required by Sections 1770 and following, of the California Labor Code, the Contractor shall pay not less than the prevailing rate of per diem wages as determined by the Director of the California Department of Industrial Relations. A list of these prevailing wages can be found on the Internet at the following web site http://www.dir.ca.gov/DLSR/PWD/index.htm. The Contractor shall post a copy of such prevailing wages at each job site.

b. In accordance with Section 1775 of the California Labor Code, the Contractor shall, as a penalty to the Owner, forfeit not more than $50.00 for each calendar day or portion thereof, for each worker paid less than the prevailing rates as determined by the Director of the California Department of Industrial Relations for any public work done under the Contract by him or her or by any subcontractor under him or her.

VII.2 Payroll Records; Retention; Inspection; Noncompliance Penalties; Rules And Regulations

Contractor shall comply with the provisions of Section 1776 of the California Labor Code relating to the keeping of accurate payroll records.

VII.3 Disqualification Of Contractor

Contractor shall be prohibited from performing the Work, or a portion of the Work, with a subcontractor who is ineligible to perform work on public works projects pursuant to California Labor Code sections 1777.1 or 1777.7. Any contract entered into between Contractor and a debarred subcontractor shall be void and subcontractor may not receive any money from Owner for performing Work as a subcontractor on the Project, and any money from Owner that may have been paid to any barred subcontractor by Contractor on the Project shall be returned to Owner. Contractor shall be responsible for the payment of wages to workers of a debarred subcontractor who has been allowed to work on the Project.

VII.4 Apprentices On Public Works

The Contractor shall comply with all applicable provisions of Section 1777.5 of the California Labor Code relating to employment of apprentices on public works.

VII.5 Working Hours

The Contractor shall comply with all applicable provisions of Section 1810 to 1815, inclusive, of the California Labor Code relating to working hours. The Contractor shall, as a penalty to the Owner, forfeit $25.00 for each worker employed in the execution of the Contract by the Contractor or by any subcontractor for each calendar day during which such worker is required or permitted to work more than eight (8) hours in any one calendar day and forty (40) hours in any one calendar week, unless such worker receives compensation for all hours worked in excess of eight (8) hours at not less than one and one-half (1-1/2) times the basic rate of pay. Unless otherwise specified in the Technical Specifications, no work shall be conducted outside the hours of 7:00 AM and 4:00 PM on weekdays, without prior approval of the District Representative.

VII.6 Workers' Compensation

a. In accordance with the provisions of Section 3700 of the California Labor Code, the Contractor shall secure the payment of compensation to its employees.

b. Prior to beginning work under the Contract, the Contractor shall sign and file with the Owner the following certification:

"I, Contractor, am aware of the provisions of Section 3700 of the Labor Code which require every employer to be insured against liability for workers' compensation or to undertake self-insurance in accordance with the provisions of that code, and I will comply with such provisions before commencing the performance of the Work of this Contract."

c. Notwithstanding the foregoing provisions, before the Contract is executed on behalf of the Owner, the Contractor shall furnish satisfactory evidence that it has secured in the manner required and provided by law the payment of workers' compensation.

VII.7 Protection Of Workers In Excavations

For the protection of workers from the hazard of caving ground, each employee in an excavation shall be protected from cave-ins by an adequate protective system designed in accordance with Section 1541.1, Title 8, California Occupational Safety and Health Regulations.

VII.8 Inspections

Contractor shall comply with all applicable provisions of section 16100 of Title 8 of the California Code of Regulations, which require Contractor to keep accurate records of the Work performed as provided in Labor Code section 1812, to allow Owner to inspect Contractor's payroll records pursuant to Labor Code section 1776 and section 16400(e) of Title 8 of the California Code of Regulations, and to comply with all other requirements imposed by law.

VII.9 Contractor Not Responsible For Damage Resulting From Certain Acts Of God

As provided in Section 7105 of the California Public Contract Code, the Contractor shall not be responsible for the cost of repairing or restoring damage to the Work which damage is determined to have been proximately caused by an act of God, in excess of five percent (5%) of the contracted amount, provided, that the Work damaged was built in accordance with accepted and applicable building standards and the Plans and Specifications of the Owner. The Contractor shall obtain insurance to indemnify the Owner for any damage to the Work caused by an act of God if the insurance premium is a separate bid item in the bid price schedule for the Work. For purposes of this Section, the term "acts of God" shall include only the following occurrences or conditions and effects: earthquakes in excess of a magnitude of 3.5 on the Richter Scale and tidal waves.

VII.10 Unpaid Claims

If, at any time prior to the expiration of the period for service of a stop notice, there is served upon the Owner a stop notice as provided in Sections 3183 and 3210 of the California Civil Code, pursuant to Section 3186 of the California Civil Code, the Owner shall, until the discharge thereof, withhold from the monies under its control so much of said monies due or to become due to the Contractor under this Contract as shall be sufficient to answer the claim stated in such stop notice and to provide for the reasonable cost of any litigation thereunder; provided, that if the Owner shall, in its discretion, permit Contractor to file with the Owner the bond referred to in Section 3196 of the Civil Code of the State of California, said monies shall not thereafter be withheld on account of such stop notice.

VII.11 Retainage From Progress Payments.

Pursuant to Section 22300 of the California Public Contract Code, the Contractor may substitute securities for any money withheld by the Owner to insure performance under the Contract. At the request and expense of the Contractor, securities equivalent to the amount withheld shall be deposited with the Owner or with a state or federally chartered bank in California as the escrow agent, who shall return such securities to the Contractor upon satisfactory completion of the Contract. Alternatively, the Contractor may request and the Owner shall make payment of retentions earned directly to the escrow agent at the expense of the Contractor. At the expense of the Contractor, the Contractor may direct the investment of the payments into securities and the Contractor shall receive the interest earned on the investments upon the same terms provided for in this section for securities deposited by the Contractor. Upon satisfactory completion of the Contract, the Contractor shall receive from the escrow agent all securities, interest, and payments received by the escrow agent from the Owner, pursuant to the terms of this section. If Contractor elects to receive interest on moneys withheld in retention by Owner, Contractor shall, at the request of any subcontractor performing more than five percent (5%) of Contractor's total Bid, make that option available to the subcontractor regarding any moneys withheld in retention by Contractor from the subcontractor. The subcontractor shall receive the identical rate of interest received by Contractor from Owner on any retention moneys withheld from the subcontractor, less any actual pro rata costs associated with administering and calculating that interest. In the event that the interest rate is a fluctuating rate, the rate for the subcontractor shall be determined by calculating the interest rate paid during the time that retentions were withheld from the subcontractor. If Contractor elects to substitute securities in lieu of retention, then, by mutual consent of Contractor and the subcontractor, the subcontractor may substitute securities in exchange for the release of moneys held in retention by Contractor. Deposit of securities with an escrow agent shall be subject to a written agreement between the escrow agent, Contractor and the Owner which is substantially similar to the form provided in California Public Contract Code section 22300. The Owner will not certify that the Contract has been satisfactorily completed until at least thirty (30) business days after filing by the Owner of a Notice of Completion. Securities eligible for investment under Section 22300 shall be limited to those listed in Section 16430 of the Government Code and to bank or savings and loan certificates of deposit, interest bearing demand deposit accounts, standby letters of credit, or any other security mutually agreed to in writing by the Contractor and the Owner.

VII.12 Public Works Contracts; Assignment To Awarding Body

In accordance with Section 7103.5 of the California Public Contract Code, the Contractor and subcontractors shall conform to the following requirements. In entering into a public works contract or a subcontract to supply goods, services, or materials pursuant to a public works contract, the Contractor or subcontractor offers and agrees to assign to the awarding body all rights, title, and interest in and to all causes of action it may have under Section 4 of the Clayton Act (15 U.S.C. Sec. 15) or under the Cartwright Act (Chapter 2 (commencing with Section 16700) of Part 2 of Division 7 of the Business and Professions Code), arising from purchases of goods, services, or materials pursuant to the public works contract or the subcontract. This assignment shall be made and become effective at the time the awarding body tenders final payment to the Contractor, without further acknowledgment by the parties.

VII.13 Removal, Relocation, Or Protection Of Existing Utilities

a. In accordance with the provisions of Section 4215 of the California Government Code, Owner shall be responsible for the timely removal, relocation, or protection of existing main or trunk line utility facilities located on the Project site subject to the Contract Documents, if such utilities are not identified by Owner in the plans and specifications made a part of the Request for Bid. Owner will compensate Contractor for the costs of locating, repairing damage not due to the failure of the Contractor to exercise reasonable care, and removing or relocating such utility facilities not indicated in the plans and specifications with reasonable accuracy, and for equipment on the project necessarily idled during such work.

b. Nothing in this Section VII.13 shall be deemed to require Owner to indicate the presence of existing service laterals or appurtenances when the presence of such utilities on the site of the Project can be inferred from the presence of other visible facilities, such as buildings, meter and junction boxes, on or adjacent to the site of construction; provided, however, nothing in this Section VII.13 shall relieve Owner from identifying mainlines in the Plans and Specifications.

c. If the Contractor while performing the Contract discovers utility facilities not identified by the public agency in the Contract Documents, Contractor shall immediately notify Owner and utility in writing.

d. The public utility, where they are the Owner, shall have the sole discretion to perform such repairs or relocation work or permit the Contractor to do such repairs or relocation work at a reasonable price.

VII.14 Retention Proceeds; Withholding; Disbursement

In accordance with Section 7107 of the Public Contracts Code, the following shall apply:

a. The retention proceeds withheld from any payment by the Owner from the original Contractor, or by the original Contractor from any subcontractor, shall be subject to this Section VII.14.

b. Within sixty (60) business days after the date of completion of the Work, the retention withheld by the Owner shall be released. In the event of a dispute between the Owner and the Contractor, the Owner may withhold from the final payment an amount not to exceed one hundred and fifty percent (150%) of the disputed amount. For the purposes of this Section, "completion" means any of the following:

1. The occupation, beneficial use, and enjoyment of a work of improvement, excluding any operation only for testing, startup, or commissioning, by the Owner, accompanied by cessation of labor on the Work.
2. The acceptance by the Owner of the work of improvement.
3. After the commencement of the Work, a cessation of labor on the Work for a continuous period of one hundred (100) calendar days or more, due to factors beyond the control of the Contractor.
4. After the commencement of the Work, a cessation of labor on the Work for a continuous period of thirty (30) calendar days or more, if the Owner files for record a notice of cessation or a notice of completion.

c. Subject to this Section VII.14, within seven (7) business days from the time that all or any portion of the retention proceeds are received by the Contractor, the Contractor shall pay each of its subcontractors from whom retention has been withheld, each subcontractor's share of the retention received. However, if a retention payment received by the Contractor is specifically designated for a particular subcontractor, payment of the retention shall be made to the designated subcontractor, if the payment is consistent with the terms of the subcontract.

d. The Contractor may withhold from a subcontractor its portion of the retention proceeds if a bona fide dispute exists between the subcontractor and the Contractor. The amount withheld from the retention payment shall not exceed one hundred and fifty percent (150%) of the estimated value of the disputed amount.

e. In the event that retention payments are not made within the time periods required by this Section VII.14, the Owner or Contractor withholding the unpaid amount shall be subject to a charge of two percent (2%) per month on the improperly withheld amount, in lieu of any interest otherwise due. Additionally, in any action for the collection of funds wrongfully withheld, the prevailing party shall be entitled to attorney's fees and costs.

VII.15 Timely Progress Payments; Interest; Payment Requests

a. If the Owner fails to make any progress payment within thirty (30) calendar days after receipt of an undisputed and properly submitted payment request from the Contractor, the Owner shall pay interest to the Contractor equivalent to the legal rate set forth in subdivision (a) of Section 685.010 of the California Code of Civil Procedure.

b. Upon receipt of a payment request, the Owner shall act in accordance with both of the following:

1. Each payment request shall be reviewed by the Owner as soon as practicable after receipt for the purpose of determining that the payment request is a proper payment request.

2. Any payment request determined not to be a proper payment request suitable for payment shall be returned to the Contractor as soon as practicable, but not later than seven (7) calendar days, after receipt. A request returned pursuant to this Section shall be accompanied by a document setting forth in writing the reasons why the payment request is not proper.

c. The number of days available to the Owner to make a payment without incurring interest pursuant to this Section shall be reduced by the number of days by which the Owner exceeds the seven-day requirement set forth above.

d. For purposes of this Section:

1. A "progress payment" includes all payments due the Contractor, except that portion of the final payment designated by the Contract as retention earnings.

2. A payment request shall be considered properly executed if funds are available for payment of the payment request, and payment is not delayed due to an audit inquiry by the financial officer of the Owner.

VII.16 Digging Trenches Or Other Excavations

a. Contractor shall promptly, and before the following conditions are disturbed, notify Owner, in writing of any: (1) material that Contractor believes may be material and is hazardous waste, as defined in Section 25117 of the California Health and Safety Code, and is required to be removed to a class I, class II or class III disposal site in accordance with provisions of existing law; (2) subsurface or latent physical conditions at the site differing from those indicated; or (3) unknown physical conditions at the site of any unusual nature, different materially from those ordinarily encountered and generally recognized as inherent work of the character provided for in the Contract Documents

b. Owner shall promptly investigate the conditions, and if Owner finds that the conditions do materially so differ, or do involve hazardous waste, and cause a decrease or increase in the Contractor's cost of, or the time required for, performance of any part of the Work shall issue a change order under the procedures described in the Contract Documents.

c. In the event that a dispute arises between Owner and the Contractor, whether the conditions materially differ, or involve hazardous waste, or cause a decrease or increase in the Contractor's cost of, or time required for, performance of any part of the Work, the Contractor shall not be excused from any scheduled completion date provided for by the Contract Documents, but shall proceed with all work to be performed under the Contract Documents. Contractor shall retain any and all rights provided either by the Contract Documents or by law which pertain to the resolution of disputes and protests between Owner and Contractor.

VII.17. DIR Registration Requirements.

The Department of Industrial Relations ("DIR") requires that:

a. No contactor or subcontractor may be listed on a bid proposal for a public works project unless they are registered with the DIR;

b. No contractor or subcontractor may be awarded a public works contract unless registered with the DIR; and,

c. Work performed on the public works project is subject to compliance monitoring and enforcement by the DIR.

VII.18. DIR Job Site Posting Requirements.

The Contractor shall post job site notices in compliance with Title 8 of the California Code of Regulations, section 16451.

VIII. MISCELLANEOUS

VIII.1. Disputes

Except as otherwise specifically provided in the Contract Documents, the District Representative will initially decide all claims of the Contractor and all disputes arising under and by virtue of the Contract. Such claim or dispute will be processed and decided by the District Representative as soon as practicable after its submission and the submission or availability of any additional information necessary to its decision. If the Contractor is dissatisfied with the District Representative's decision, the Contractor may, within ten (10) calendar days from the date of the District Representative's decision, follow the procedures set forth in Section III.8. If the Contractor fails to follow the procedures set forth in Section III.8 within the 10-day period, then the District Representative's decision shall be final, conclusive, and binding on the Contractor.

VIII.2. Resolution of Construction Claims

a. In accordance with Section 20104 et seq. of the California Public Contract Code, this Section applies to all claims of $375,000 or less which arise between the Contractor and the Owner under this Contract for:

1. A time extension;

2. Payment of money or damages arising from work done by or on behalf of the Contractor pursuant to this Contract and payment of which is not otherwise expressly provided for as the Contractor is not otherwise entitled; or

3. An amount the payment of which is disputed by the Owner.

b. For any claim set out in subsection (a), above, the following requirements apply:

1. The claim shall be in writing and include the documents necessary to substantiate the claim. Claims must be filed on or before the date of final payment. Nothing herein is intended to extend the time limit or supersede notice requirements otherwise provided by Contractor for the filing of claims.

2. For claims of less than Fifty Thousand Dollars ($50,000), the Owner shall respond in writing to any written claim within forty-five (45) calendar days of receipt of the claim, or may request, in writing, within thirty (30) calendar days of receipt of the claim any additional documentation supporting the claim or relating to defenses or claims the Owner may have against the Contractor.

   If additional information is thereafter required, it shall be requested and provided pursuant to this subsection, upon mutual agreement of the Owner and the Contractor.

   The Owner's written response to the claim, as further documented, shall be submitted to the Contractor within fifteen (15) calendar days after receipt of further documentation or within a period of time no greater than that taken by the Contractor in producing the additional information, whichever is greater.

3. For claims of over Fifty Thousand Dollars ($50,000) and less than or equal to Three Hundred Seventy-Five Thousand Dollars ($375,000), the Owner shall respond in writing to all written claims within sixty (60) calendar days of receipt of the claim, or may request, in writing, within thirty (30) calendar days of receipt of the claim, any additional documentation supporting the claim or relating to defenses or claims the Owner may have against the Contractor.

   If additional information is thereafter required, it shall be requested and provided pursuant to this subsection, upon mutual agreement of the Owner and the Contractor.

   The Owner's written response to the claim, as further documented, shall be submitted to Contractor within 30 days after receipt of the further documentation, or within a period of time no greater than that taken by the Contractor in producing the additional information or requested documentation, whichever is greater.

4. If the Contractor disputes the Owner's written response, or the Owner fails to respond within the time prescribed, the Contractor may notify the Owner, in writing, either within 15 days of receipt of the Owner response or within fifteen (15) calendar days of the Owner's failure to respond within the time prescribed, respectively, and demand an informal conference to meet and confer for settlement of the issues in dispute. Upon a demand, the Owner shall schedule a meet and confer conference within thirty (30) calendar days for settlement of the dispute.

5. If following the meet and confer conference, the claim or any portion remains in dispute, the Contractor may file a claim pursuant to Chapter 1 (commencing with section 900) and Chapter 2 (commencing with section 910) of Part 3 of Division 3.6 of Title 1 of the California Government Code. For purposes of those provisions, the running of the period of time within which a claim must be filed shall be tolled from the time Contractor submits its written claim pursuant to subsection (b)(1), above, until the time the claim is denied, including any period of time utilized by the meet and confer conference.

6. This Section does not apply to tort claims and nothing in this Section is intended nor shall be construed to change the time periods for filing tort claims or actions specified by Chapter 1 (commencing with Section 900) and Chapter 2 (commencing with Section 910) of Part 3 of Division 3.6 of Title 1 of the California Government Code.

c. The following procedures are established for all civil actions filed to resolve claims subject to this Section:

1. Within sixty (60) calendar days, but no earlier than thirty (30) calendar days, following the filing or responsive pleadings, the court shall submit the matter to non-binding mediation unless waived by mutual written stipulation of both parties. The mediation process shall provide for the selection within fifteen (15) calendar days by both parties of a disinterested third person as mediator, shall be commenced within thirty (30) calendar days of the submittal, and shall be concluded within fifteen (15) calendar days from the commencement of the mediation unless a time requirement is extended upon a good cause showing to the court.

2. If the matter remains in dispute, the case shall be submitted to judicial arbitration pursuant to Chapter 2.5 (commencing with section 1141.10) of Title 3 of Part 3 of the California Code of Civil Procedure, notwithstanding Section 1141.11 of that code. The Civil Discovery Act of 1986 (Article 3 (commencing with Section 2016) of Chapter 3 of Title 3 of Part 4 of the Code of Civil Procedure) shall apply to any proceeding brought under this subsection consistent with the rules pertaining to judicial arbitration.

   Notwithstanding any other provision of law or these Contract Documents, upon written stipulation of the parties, arbitrators appointed for purposes of this Section shall be experienced in construction law, and, upon written stipulation of the parties, mediators and arbitrators shall be paid necessary and reasonable hourly rates of pay not to exceed their customary rate, and such fees and expenses shall be paid equally by the parties, except in the case of arbitration where the arbitrator, for good cause, determines a different division.

   In addition to Chapter 2.5 (commencing with section 1141.10) of Title 3 of Part 3 of the California Code of Civil Procedure, any party appealing an arbitration award who does not obtain a more favorable judgment shall, in addition to payment of costs and fees under that Chapter, also pay the attorneys' fees on appeal of the other party.

d. The Owner shall not fail to pay money as to any portion of a claim which is undisputed except as otherwise provided in this Contract.

e. In any suit filed under Section 20104.4 of the California Public Contract Code the Owner shall pay interest at the legal rate on any arbitration award or judgment. The interest shall begin to accrue on the date the suit is filed in a court of law.

VIII.3. Public Works Contracts; Assignment to Awarding Body

The Contractor and subcontractors shall conform to the following requirements. In entering into a public works contract or a subcontract to supply goods, services, or materials pursuant to a public work contract, the Contractor or subcontractor offers and agrees to assign to the awarding body all rights, title and interest in and to all causes of action it may have under Section 4 of the Clayton Act (15 U.S.C. Sec. 15) or under the Cartwright Act (Chapter 2 (commencing with Section 16700 of part 2 of Division 7 of the California Business and Professions Code), arising from purchases of goods, services, or materials pursuant to the public works contract or the subcontract. This assignment shall be made and become effective at the time the awarding body tenders final payment to the Contractor, without further acknowledgment by the parties.

VIII.4. Notice of Completion

As required by the California Code of Civil Procedure, and within ten (10) calendar days after date of acceptance of the Work by the Owner's governing body, the Owner will file, in the County Recorder's office for the county in which the Work is located, a Notice of Completion of the Work.

SPECIAL CONSIDERATIONS

PART 1 - GENERAL

1.01 GENERAL CONDITIONS

A. Water supply available to the Contractor: The District will supply water at no cost to Contractor from a District fire hydrant or other water source located at or near the work site. Water from the designated sources can be used in reasonable quantities for use on this Project only.

B. Working Hours: All Project work shall be conducted between the hours of 7:00 AM and 3:30 PM on weekdays, not including holidays, unless otherwise agreed to in writing by the District Representative. Weekend work shall only be allowed to accommodate job completion, at District Representative's prior written approval.

1.02 MEASUREMENT AND PAYMENT

A. General: Measurement and payment for the Work will be by the lump sum method as provided in the Bid Schedule.

B. Lump sum: Labor, materials, tools, equipment, transportation, removals, and incidentals to complete all the work thereof shall be included in the lump sum total.

C. Payment: Payment shall be made by the Owner to eighty-five (85) percent of the Work completed in monthly progress payments and a final payment. The fifteen (15) percent retention will be paid 35 days following final acceptance of the Work by the District's Board of Trustees.

1.03 SUBMITTALS

A. Prior to the start of work, Contractor shall provide to the District Representative for approval, all required project submittals as specified in the Project Drawings.

B. Manufacturer's product data.

1.04 PROTECTION

A. The Contractor shall be responsible for any damage caused by the Contractor's employees, subcontractors, or equipment, and Contractor shall make necessary repairs in accordance with the Contract.

PART 2 - EXECUTION

2.01 FIELD QUALITY CONTROL

A. The Contractor shall control the quality of the work and to assure compliance with the Specifications and other Contract Documents.

B. The work site is located on District-owned property. The Contractor must always respect the privacy of nearby landowners and exercise constant diligence in keeping the work site free of garbage (i.e., personal trash, product wrapping, empty product bags and other containers, etc.) and other construction debris.

2.02 JOB COMPLETION

A. Finished fencing shall be maintained in finished clean condition until the Work is accepted by the District.

B. Final clean-up of the work area will include the removal of all debris, empty containers, and other personal and construction waste products.

END OF SECTION

APPENDICES

Appendix A

Contract Change Order Form

CONTRACT CHANGE ORDER FORM

CHANGE ORDER NUMBER: _____

DATE: _____

BASE CONTRACT AMOUNT: PRIOR CHANGE ORDERS AMOUNT:
TOTAL CONTRACT PRIOR TO THIS CHANGE ORDER: THIS CHANGE ORDER AMOUNT: NEW CONTRACT AMOUNT:

ORIGINAL
CONTRACT
DATE:

PROJECT:
OWNER: Santa Ynez River Water Conservation District, Improvement District No.1
CONTRACTOR:

Change Order Items	Addition	Deduction	Days Ext.
NET TOTAL:			

We hereby agree to make the above change subject to the terms of this order for the sum of :

written dollar amount ---------- Dollars.

Recommended by Engineer:	Approved by Owner:	Accepted by Contractor:
Date:	Date:	Date:

NOTE: The documents supporting this Change Order, including any drawings and estimates of cost, if required, are attached hereto and made a part hereof. This Order shall not be considered as such until it has been signed by the Owner, and the Contractor. Upon final approval, distribution of copies will be made as required.

CHANGES: All workmanship and materials called for by this Order shall be fully in accordance with the original Contract Documents insofar as the same may be applied without conflict to the conditions set forth by this Order. The time for completing the Contract will not be extended unless expressly provided for in this Order.

Appendix B

Technical Specifications

TECHNICAL SPECIFICATIONS

DIVISION 26 - ELECTRICAL

26 05 19	**LOW-VOLTAGE ELECTRICAL POWER CONDUCTORS AND CABLES**
26 05 26	**GROUNDING AND BONDING FOR ELECTRICAL SYSTEMS**
26 05 29	**HANGERS AND SUPPORTS FOR ELECTRICAL SYSTEMS**
26 05 33.13	**CONDUIT FOR ELECTRICAL SYSTEMS**
26 05 33.16	**BOXES FOR ELECTRICAL SYSTEMS**
26 05 53	**IDENTIFICATION FOR ELECTRICAL SYSTEMS**
26 21 00	**LOW-VOLTAGE ELECTRICAL SERVICE ENTRANCE**

SECTION 26 05 19
LOW-VOLTAGE ELECTRICAL POWER CONDUCTORS AND CABLES

PART 1 GENERAL

1.01 SECTION INCLUDES

A. Single conductor building wire.

B. Wiring connectors.

C. Electrical tape.

D. Heat shrink tubing.

E. Wire pulling lubricant.

1.02 REFERENCE STANDARDS

A. ASTM B3 - Standard Specification for Soft or Annealed Copper Wire; 2013 (Reapproved 2024).

B. ASTM B8 - Standard Specification for Concentric-Lay-Stranded Copper Conductors, Hard, Medium-Hard, or Soft; 2023.

C. ASTM B33 - Standard Specification for Tin-Coated Soft or Annealed Copper Wire for Electrical Purposes; 2010, with Editorial Revision (2020).

D. ASTM B787/B787M - Standard Specification for 19 Wire Combination Unilay-Stranded Copper Conductors for Subsequent Insulation; 2004 (Reapproved 2020).

E. ASTM D3005 - Standard Specification for Low-Temperature Resistant Vinyl Chloride Plastic Pressure-Sensitive Electrical Insulating Tape; 2024.

F. NECA 1 - Standard for Good Workmanship in Electrical Construction; 2023.

G. NEMA WC 70 - Power Cables Rated 2000 Volts or Less for the Distribution of Electrical Energy; 2021.

H. NFPA 70 - National Electrical Code; Most Recent Edition Adopted by Authority Having Jurisdiction, Including All Applicable Amendments and Supplements.

I. UL 44 - Thermoset-Insulated Wires and Cables; Current Edition, Including All Revisions.

J. UL 83 - Thermoplastic-Insulated Wires and Cables; Current Edition, Including All Revisions.

K. UL 267 - Outline of Investigation for Wire-Pulling Compounds; Current Edition, Including All Revisions.

L. UL 486A-486B - Wire Connectors; Current Edition, Including All Revisions.

M. UL 486C - Splicing Wire Connectors; Current Edition, Including All Revisions.

N. UL 486D - Sealed Wire Connector Systems; Current Edition, Including All Revisions.

O. UL 510 - Polyvinyl Chloride, Polyethylene, and Rubber Insulating Tape; Current Edition, Including All Revisions.

1.03 QUALITY ASSURANCE

A. Comply with requirements of NFPA 70.

PART 2 PRODUCTS

2.01 CONDUCTOR AND CABLE APPLICATIONS

A. Do not use conductors and cables for applications other than as permitted by NFPA 70 and product listing.

B. Provide single conductor building wire installed in suitable raceway unless otherwise indicated, permitted, or required.

2.02 CONDUCTOR AND CABLE GENERAL REQUIREMENTS

A. Provide products that comply with requirements of NFPA 70.

B. Provide products listed, classified, and labeled as suitable for the purpose intended.

C. Unless specifically indicated to be excluded, provide all required conduit, boxes, wiring, connectors, etc. as required for a complete operating system.

D. Comply with NEMA WC 70.

E. Thermoplastic-Insulated Conductors and Cables: Listed and labeled as complying with UL 83.

F. Thermoset-Insulated Conductors and Cables: Listed and labeled as complying with UL 44.

G. Conductor Material:
   1. Provide copper conductors only. Aluminum conductors are not acceptable for this project. Conductor sizes indicated are based on copper.
   2. Copper Conductors: Soft drawn annealed, 98 percent conductivity, uncoated copper conductors complying with ASTM B3, ASTM B8, or ASTM B787/B787M unless otherwise indicated.
   3. Tinned Copper Conductors: Comply with ASTM B33.

H. Minimum Conductor Size: 12 AWG.

I. Conductor Color Coding:
   1. Color code conductors as indicated unless otherwise required by the authority having jurisdiction. Maintain consistent color coding throughout project.
   2. Color Coding Method: Integrally colored insulation.
      a. Conductors size 4 AWG and larger may have black insulation color coded using vinyl color coding electrical tape.
   3. Color Code:
      a. 240/120 V, 1 Phase, 3 Wire System:
         1) Phase A: Black.
         2) Phase B: Red.
         3) Neutral/Grounded: White.
      b. Equipment Ground, All Systems: Green.
      c. For control circuits, comply with manufacturer's recommended color code.

2.03 SINGLE CONDUCTOR BUILDING WIRE

A. Description: Single conductor insulated wire.

B. Conductor Stranding:
   1. Feeders and Branch Circuits:
      a. Size 10 AWG and Smaller: Solid.
      b. Size 8 AWG and Larger: Stranded.

C. Insulation Voltage Rating: 600 V.

D. Insulation:
   1. Copper Building Wire: Type THHN/THWN or THHN/THWN-2, except as indicated below.

2.04 WIRING CONNECTORS

A. Description: Wiring connectors appropriate for the application, suitable for use with the conductors to be connected, and listed as complying with UL 486A-486B or UL 486C as applicable.

B. Wiring Connectors for Splices and Taps:
   1. Copper Conductors Size 8 AWG and Smaller: Use twist-on insulated spring connectors.
   2. Copper Conductors Size 6 AWG and Larger: Use mechanical connectors or compression connectors.

C. Twist-on Insulated Spring Connectors: Rated 600 V, 221 degrees F for standard applications and 302 degrees F for high temperature applications; pre-filled with sealant and listed as complying with UL 486D for damp and wet locations.

D. Mechanical Connectors: Provide bolted type or set-screw type.

E. Compression Connectors: Provide circumferential type or hex type crimp configuration.

2.05 ACCESSORIES

A. Electrical Tape:
   1. Vinyl Color Coding Electrical Tape: Integrally colored to match color code indicated; listed as complying with UL 510; minimum thickness of 7 mil; resistant to abrasion, corrosion, and sunlight; suitable for continuous temperature environment up to 221 degrees F.
   2. Vinyl Insulating Electrical Tape: Complying with ASTM D3005 and listed as complying with UL 510; minimum thickness of 7 mil; resistant to abrasion, corrosion, and sunlight; conformable for application down to 0 degrees F and suitable for continuous temperature environment up to 221 degrees F.
   3. Moisture Sealing Electrical Tape: Insulating mastic compound laminated to flexible, all-weather vinyl backing; minimum thickness of 90 mil.

B. Heat Shrink Tubing: Heavy-wall, split-resistant, with factory-applied adhesive; rated 600 V; suitable for direct burial applications; listed as complying with UL 486D.

C. Wire Pulling Lubricant:
   1. Listed and labeled as complying with UL 267.
   2. Suitable for use with conductors/cables and associated insulation/jackets to be installed.
   3. Suitable for use at installation temperature.

PART 3 EXECUTION

3.01 EXAMINATION

A. Verify that interior of building has been protected from weather.

B. Verify that work likely to damage wire and cable has been completed.

C. Verify that raceways, boxes, and equipment enclosures are installed and are properly sized to accommodate conductors and cables in accordance with NFPA 70.

D. Verify that field measurements are as indicated.

E. Verify that conditions are satisfactory for installation prior to starting work.

3.02 PREPARATION

A. Clean raceways thoroughly to remove foreign materials before installing conductors and cables.

3.03 INSTALLATION

A. Circuiting Requirements:
   1. Unless dimensioned, circuit routing indicated is diagrammatic.
   2. Arrange circuiting to minimize splices.
   3. Maintain separation of Class 1, Class 2, and Class 3 remote-control, signaling, and power-limited circuits in accordance with NFPA 70.

B. Install products in accordance with manufacturer's instructions.

C. Perform work in accordance with NECA 1 (general workmanship).

D. Installation in Raceway:
   1. Tape ends of conductors and cables to prevent infiltration of moisture and other contaminants.
   2. Pull all conductors and cables together into raceway at same time.
   3. Do not damage conductors and cables or exceed manufacturer's recommended maximum pulling tension and sidewall pressure.
   4. Use suitable wire pulling lubricant where necessary, except when lubricant is not recommended by the manufacturer.

E. Paralleled Conductors: Install conductors of the same length and terminate in the same manner.

F. Secure and support conductors and cables in accordance with NFPA 70 using suitable supports and methods approved by the authority having jurisdiction. Provide independent support from building structure. Do not provide support from raceways, piping, ductwork, or other systems.

G. Install conductors with a minimum of 12 inches of slack at each outlet.

H. Neatly train and bundle conductors inside boxes, wireways, panelboards and other equipment enclosures.

I. Group or otherwise identify neutral/grounded conductors with associated ungrounded conductors inside enclosures in accordance with NFPA 70.

J. Make wiring connections using specified wiring connectors.
   1. Make splices and taps only in accessible boxes. Do not pull splices into raceways or make splices in conduit bodies or wiring gutters.
   2. Remove appropriate amount of conductor insulation for making connections without cutting, nicking or damaging conductors.
   3. Do not remove conductor strands to facilitate insertion into connector.
   4. Clean contact surfaces on conductors and connectors to suitable remove corrosion, oxides, and other contaminates. Do not use wire brush on plated connector surfaces.
   5. Mechanical Connectors: Secure connections according to manufacturer's recommended torque settings.
   6. Compression Connectors: Secure connections using manufacturer's recommended tools and dies.

K. Insulate splices and taps that are made with uninsulated connectors using methods suitable for the application, with insulation and mechanical strength at least equivalent to unspliced conductors.
   1. Damp Locations: Use insulating covers specifically designed for the connectors, electrical tape, or heat shrink tubing.
      a. For connections with insulating covers, apply outer covering of moisture sealing electrical tape.
      b. For taped connections, follow same procedure as for dry locations but apply outer covering of moisture sealing electrical tape.

L. Insulate ends of spare conductors using vinyl insulating electrical tape.

M. Field-Applied Color Coding: Where vinyl color coding electrical tape is used in lieu of integrally colored insulation as permitted in Part 2 under "Color Coding", apply half overlapping turns of tape at each termination and at each location conductors are accessible.

N. Unless specifically indicated to be excluded, provide final connections to all equipment and devices, including those furnished by others, as required for a complete operating system.

3.04 FIELD QUALITY CONTROL

A. Correct deficiencies and replace damaged or defective conductors and cables.

END OF SECTION

SECTION 26 05 26
GROUNDING AND BONDING FOR ELECTRICAL SYSTEMS

PART 1 GENERAL

1.01 SECTION INCLUDES

A. Grounding and bonding requirements.

B. Conductors for grounding and bonding.

C. Connectors for grounding and bonding.

D. Ground rod electrodes.

E. Ground access wells.

1.02 REFERENCE STANDARDS

A. IEEE 81 - IEEE Guide for Measuring Earth Resistivity, Ground Impedance, and Earth Surface Potentials of a Grounding System; 2025.

B. NECA 1 - Standard for Good Workmanship in Electrical Construction; 2023.

C. NEMA GR 1 - Grounding Rod Electrodes and Grounding Rod Electrode Couplings; 2022.

D. NFPA 70 - National Electrical Code; Most Recent Edition Adopted by Authority Having Jurisdiction, Including All Applicable Amendments and Supplements.

E. UL 467 - Grounding and Bonding Equipment; Current Edition, Including All Revisions.

1.03 ADMINISTRATIVE REQUIREMENTS

A. Coordination:
   1. Verify exact locations of underground metal water service pipe entrances to building.
   2. Notify Engineer of any conflicts with or deviations from Contract Documents. Obtain direction before proceeding with work.

B. Sequencing:
   1. Do not install ground rod electrodes until final backfill and compaction is complete.

1.04 QUALITY ASSURANCE

A. Comply with requirements of NFPA 70.

PART 2 PRODUCTS

2.01 GROUNDING AND BONDING REQUIREMENTS

A. Do not use products for applications other than as permitted by NFPA 70 and product listing.

B. Unless specifically indicated to be excluded, provide all required components, conductors, connectors, conduit, boxes, fittings, supports, accessories, etc. as necessary for a complete grounding and bonding system.

C. Where conductor size is not indicated, size to comply with NFPA 70 but not less than applicable minimum size requirements specified.

D. Grounding System Resistance:
   1. Achieve specified grounding system resistance under normally dry conditions unless otherwise approved by Engineer. Precipitation within the previous 48 hours does not constitute normally dry conditions.
   2. Grounding Electrode System: Not greater than 25 ohms to ground, when tested according to IEEE 81 using "fall-of-potential" method.

E. Grounding Electrode System:
   1. Provide connection to required and supplemental grounding electrodes indicated to form grounding electrode system.
      a. Provide continuous grounding electrode conductors without splice or joint.

b. Install grounding electrode conductors in raceway where exposed to physical damage. Bond grounding electrode conductor to metallic raceways at each end with bonding jumper.

2. Metal Underground Water Pipe(s):
   a. Provide connection to underground metal domestic and fire protection (where present) water service pipe(s) that are in direct contact with earth for at least 10 feet at an accessible location not more than 5 feet from the point of entrance to the building.
   b. Provide bonding jumper(s) around insulating joints/pipes as required to make pipe electrically continuous.
   c. Provide bonding jumper around water meter of sufficient length to permit removal of meter without disconnecting jumper.
3. Ground Rod Electrode(s):
   a. Provide two electrodes unless otherwise indicated or required.
   b. Space electrodes not less than 10 feet from each other and any other ground electrode.
   c. Where location is not indicated, locate electrode(s) at least 5 feet outside building perimeter foundation as near as possible to electrical service entrance; where possible, locate in softscape (uncovered) area.
   d. Provide ground access well for each electrode.
4. Provide additional ground electrode(s) as required to achieve specified grounding electrode system resistance.

F. Service-Supplied System Grounding:
   1. For each service disconnect, provide grounding electrode conductor to connect neutral (grounded) service conductor to grounding electrode system. Unless otherwise indicated, make connection at neutral (grounded) bus in service disconnect enclosure.
   2. For each service disconnect, provide main bonding jumper to connect neutral (grounded) bus to equipment ground bus where not factory-installed. Do not make any other connections between neutral (grounded) conductors and ground on load side of service disconnect.

G. Bonding and Equipment Grounding:
   1. Provide bonding for equipment grounding conductors, equipment ground busses, metallic equipment enclosures, metallic raceways and boxes, device grounding terminals, and other normally non-current-carrying conductive materials enclosing electrical conductors/equipment or likely to become energized as indicated and in accordance with NFPA 70.
   2. Provide insulated equipment grounding conductor in each feeder and branch circuit raceway. Do not use raceways as sole equipment grounding conductor.
   3. Where circuit conductor sizes are increased for voltage drop, increase size of equipment grounding conductor proportionally in accordance with NFPA 70.
   4. Unless otherwise indicated, connect wiring device grounding terminal to branch circuit equipment grounding conductor and to outlet box with bonding jumper.
   5. Terminate branch circuit equipment grounding conductors on solidly bonded equipment ground bus only. Do not terminate on neutral (grounded) or isolated/insulated ground bus.
   6. Provide bonding jumper across expansion or expansion/deflection fittings provided to accommodate conduit movement.
   7. Provide bonding for interior metal piping systems in accordance with NFPA 70. This includes, but is not limited to:
      a. Metal water piping where not already effectively bonded to metal underground water pipe used as grounding electrode.
   8. Provide bonding for metal building frame.

H. Pole-Mounted Luminaires: Also comply with Section 26 56 00.

2.02 GROUNDING AND BONDING COMPONENTS

A. General Requirements:
   1. Provide products listed, classified, and labeled as suitable for the purpose intended.
   2. Provide products listed and labeled as complying with UL 467 where applicable.

B. Conductors for Grounding and Bonding, in Addition to Requirements of Section 26 05 26:
   1. Use insulated copper conductors unless otherwise indicated.
      a. Exceptions:
         1) Use bare copper conductors where installed underground in direct contact with earth.
         2) Use bare copper conductors where directly encased in concrete (not in raceway).

C. Connectors for Grounding and Bonding:
   1. Description: Connectors appropriate for the application and suitable for the conductors and items to be connected; listed and labeled as complying with UL 467.
   2. Unless otherwise indicated, use exothermic welded connections for underground, concealed and other inaccessible connections.
   3. Unless otherwise indicated, use mechanical connectors, compression connectors, or exothermic welded connections for accessible connections.

D. Ground Rod Electrodes:
   1. Comply with NEMA GR 1.
   2. Material: Copper-bonded (copper-clad) steel.
   3. Size: 3/4 inch diameter by 10 feet length, unless otherwise indicated.

E. Ground Access Wells:
   1. Description: Open bottom round or rectangular well with access cover for testing and inspection; suitable for the expected load at the installed location.
   2. Size: As required to provide adequate access for testing and inspection, but not less than minimum size requirements specified.
   3. Depth: As required to extend below frost line to prevent frost upheaval, but not less than 10 inches.
   4. Cover: Factory-identified by permanent means with word "GROUND".

PART 3 EXECUTION

3.01 INSTALLATION

A. Install products in accordance with manufacturer's instructions.

B. Perform work in accordance with NECA 1 (general workmanship).

C. Ground Rod Electrodes: Unless otherwise indicated, install ground rod electrodes vertically. Where encountered rock prohibits vertical installation, install at 45 degree angle or bury horizontally in trench at least 30 inches (750 mm) deep in accordance with NFPA 70 or provide ground plates.
   1. Outdoor Installations: Unless otherwise indicated, install with top of rod 6 inches below finished grade.

D. Make grounding and bonding connections using specified connectors.
   1. Remove appropriate amount of conductor insulation for making connections without cutting, nicking or damaging conductors. Do not remove conductor strands to facilitate insertion into connector.
   2. Remove nonconductive paint, enamel, or similar coating at threads, contact points, and contact surfaces.
   3. Exothermic Welds: Make connections using molds and weld material suitable for the items to be connected in accordance with manufacturer's recommendations.
   4. Mechanical Connectors: Secure connections according to manufacturer's recommended torque settings.

5. Compression Connectors: Secure connections using manufacturer's recommended tools and dies.

E. Identify grounding and bonding system components in accordance with Section 26 05 53.

3.02 FIELD QUALITY CONTROL

A. Perform ground electrode resistance tests under normally dry conditions. Precipitation within the previous 48 hours does not constitute normally dry conditions.

B. Investigate and correct deficiencies where measured ground resistances do not comply with specified requirements.

C. Submit detailed reports indicating inspection and testing results and corrective actions taken.

END OF SECTION

SECTION 26 05 29
HANGERS AND SUPPORTS FOR ELECTRICAL SYSTEMS

PART 1 GENERAL

1.01 SECTION INCLUDES

A. Support and attachment requirements and components for equipment, conduit, cable, boxes, and other electrical work.

1.02 REFERENCE STANDARDS

A. ASTM A123/A123M - Standard Specification for Zinc (Hot-Dip Galvanized) Coatings on Iron and Steel Products; 2024.

B. ASTM A153/A153M - Standard Specification for Zinc Coating (Hot-Dip) on Iron and Steel Hardware; 2023.

C. ASTM B633 - Standard Specification for Electrodeposited Coatings of Zinc on Iron and Steel; 2023.

D. MFMA-4 - Metal Framing Standards Publication; 2004.

E. NECA 1 - Standard for Good Workmanship in Electrical Construction; 2023.

F. NFPA 70 - National Electrical Code; Most Recent Edition Adopted by Authority Having Jurisdiction, Including All Applicable Amendments and Supplements.

1.03 ADMINISTRATIVE REQUIREMENTS

A. Coordination:
   1. Coordinate sizes and arrangement of supports and bases with actual equipment and components to be installed.
   2. Coordinate work to provide additional framing and materials required for installation.
   3. Coordinate compatibility of support and attachment components with mounting surfaces at installed locations.
   4. Coordinate arrangement of supports with ductwork, piping, equipment and other potential conflicts.
   5. Notify Engineer of conflicts with or deviations from Contract Documents. Obtain direction before proceeding with work.

1.04 SUBMITTALS

A. Product Data: Provide manufacturer's standard catalog pages and data sheets for channel/strut framing systems, nonpenetrating rooftop supports, and post-installed concrete/masonry anchors.

1.05 DELIVERY, STORAGE, AND HANDLING

A. Receive, inspect, handle, and store products in accordance with manufacturer's instructions.

PART 2 PRODUCTS

2.01 SUPPORT AND ATTACHMENT COMPONENTS

A. General Requirements:
   1. Comply with the following. Where requirements differ, comply with most stringent.
      a. NFPA 70.
      b. Requirements of authorities having jurisdiction.
   2. Provide required hangers, supports, anchors, fasteners, fittings, accessories, and hardware as necessary for complete installation of electrical work.
   3. Provide products listed, classified, and labeled as suitable for purpose intended, where applicable.
   4. Where support and attachment component types and sizes are not indicated, select in accordance with manufacturer's application criteria as required for load to be supported.

Include consideration for vibration, equipment operation, and shock loads where applicable.

5. Do not use products for applications other than as permitted by NFPA 70 and product listing.
6. Steel Components: Use corrosion-resistant materials suitable for environment where installed.
   a. Outdoor and Damp or Wet Indoor Locations: Use galvanized steel, stainless steel, or approved equivalent unless otherwise indicated.
   b. Zinc-Plated Steel: Electroplated in accordance with ASTM B633.
   c. Galvanized Steel: Hot-dip galvanized after fabrication in accordance with ASTM A123/A123M or ASTM A153/A153M.

B. Conduit and Cable Supports: Straps and clamps suitable for conduit or cable to be supported.
   1. Conduit Straps: One-hole or two-hole type; steel or malleable iron.
   2. Conduit Clamps: Bolted type unless otherwise indicated.

C. Outlet Box Supports: Hangers and brackets suitable for boxes to be supported.

D. Metal Channel/Strut Framing Systems:
   1. Description: Factory-fabricated, continuous-slot, metal channel/strut and associated fittings, accessories, and hardware required for field assembly of supports.
   2. Comply with MFMA-4.
   3. Channel Material:
      a. Outdoor and Damp or Wet Indoor Locations: Use galvanized steel.

E. Hanger Rods: Threaded, zinc-plated steel unless otherwise indicated.

F. Anchors and Fasteners:
   1. Unless otherwise indicated and where not otherwise restricted, use anchor and fastener types indicated for specified applications.

PART 3 EXECUTION

3.01 EXAMINATION

A. Verify that field measurements are as indicated.

B. Verify that mounting surfaces are ready to receive support and attachment components.

C. Verify that conditions are satisfactory for installation prior to starting work.

3.02 INSTALLATION

A. Install products in accordance with manufacturer's instructions.

B. Install hangers and supports in accordance with NECA 1.

C. Provide independent support from building structure. Do not provide support from piping, ductwork, or other systems.

D. Unless specifically indicated or approved by Engineer, do not provide support from suspended ceiling support system or ceiling grid.

E. Unless specifically indicated or approved by Engineer, do not provide support from roof deck.

F. Do not penetrate or otherwise notch or cut structural members without approval of Structural Engineer.

G. Equipment Support and Attachment:
   1. Use supports assembled from metal channel/strut to support equipment as required.
   2. Use metal channel/strut secured to studs to support equipment surface mounted on hollow stud walls when wall strength is not sufficient to resist pull-out.
   3. Use metal channel/strut to support surface-mounted equipment in wet or damp locations to provide space between equipment and mounting surface.

4. Securely fasten floor-mounted equipment. Do not install equipment such that it relies on its own weight for support.

H. Secure fasteners in accordance with manufacturer's recommended torque settings.

I. Remove temporary supports.

3.03 FIELD QUALITY CONTROL

A. See Section 01 40 00 - Quality Requirements for additional requirements.

B. Inspect support and attachment components for damage and defects.

C. Repair cuts and abrasions in galvanized finishes using zinc-rich paint recommended by manufacturer. Replace components that exhibit signs of corrosion.

D. Correct deficiencies and replace damaged or defective support and attachment components.

END OF SECTION

SECTION 26 05 33.13
CONDUIT FOR ELECTRICAL SYSTEMS

PART 1 GENERAL

1.01 SECTION INCLUDES

A. Galvanized steel rigid metal conduit (RMC).

B. Rigid polyvinyl chloride (PVC) conduit.

1.02 REFERENCE STANDARDS

A. ANSI C80.1 - American National Standard for Electrical Rigid Steel Conduit (ERSC); 2025.

B. NECA 1 - Standard for Good Workmanship in Electrical Construction; 2023.

C. NECA 101 - Standard for Installing Steel Conduits (Rigid, IMC, EMT); 2020.

D. NECA 111 - Standard for Installing Nonmetallic Raceways (RNC, ENT, LFNC); 2025.

E. NEMA FB 1 - Fittings, Cast Metal Boxes, and Conduit Bodies for Conduit, Electrical Metallic Tubing, and Cable; 2014.

F. NEMA TC 2 - Electrical Polyvinyl Chloride (PVC) Conduit; 2020.

G. NEMA TC 3 - Polyvinyl Chloride (PVC) Fittings for Use with Rigid PVC Conduit and Tubing; 2021.

H. NFPA 70 - National Electrical Code; Most Recent Edition Adopted by Authority Having Jurisdiction, Including All Applicable Amendments and Supplements.

I. UL 6 - Electrical Rigid Metal Conduit-Steel; Current Edition, Including All Revisions.

J. UL 514B - Conduit, Tubing, and Cable Fittings; Current Edition, Including All Revisions.

K. UL 651 - Schedule 40, 80, Type EB and A Rigid PVC Conduit and Fittings; Current Edition, Including All Revisions.

L. UL 2419 - Outline of Investigation for Electrically Conductive Corrosion Resistant Compounds; Current Edition, Including All Revisions.

1.03 ADMINISTRATIVE REQUIREMENTS

A. Coordination:
   1. Coordinate minimum sizes of conduits with actual type and quantity of conductors to be installed, including adjustments for conductor sizes increased for voltage drop.
   2. Coordinate arrangement of conduits with structural members, ductwork, piping, equipment, and other potential conflicts.
   3. Verify exact conduit termination locations required for boxes, enclosures, and equipment.
   4. Coordinate work to provide roof penetrations that preserve integrity of roofing system and do not void roof warranty.
   5. Notify Engineer of conflicts with or deviations from Contract Documents. Obtain direction before proceeding with work.

B. Sequencing:
   1. Do not begin installation of conductors and cables until installation of conduit between termination points is complete.

1.04 SUBMITTALS

A. See Section 01 30 00 - Administrative Requirements for submittals procedures.

B. Product Data: Provide manufacturer's standard catalog pages and data sheets for conduits and fittings.

C. Project Record Documents: Record actual routing for conduits installed underground.

1.05 DELIVERY, STORAGE, AND HANDLING

A. Receive, inspect, handle, and store conduit and fittings in accordance with manufacturer's instructions.

PART 2 PRODUCTS

2.01 CONDUIT APPLICATIONS

A. Do not use conduit and associated fittings for applications other than as permitted by NFPA 70, manufacturer's instructions, and product listing.

B. Unless otherwise indicated and where not otherwise restricted, use conduit types indicated for specified applications. Where more than one listed application applies, comply with most restrictive requirements. Where conduit type for particular application is not specified, use galvanized steel rigid metal conduit.

C. Underground:
   1. Exterior, Direct-Buried: Use rigid PVC conduit.

2.02 CONDUIT - GENERAL REQUIREMENTS

A. Comply with NFPA 70.

B. Provide conduit, fittings, supports, and accessories required for complete raceway system.

C. Provide products listed, classified, and labeled as suitable for purpose intended.

D. Where conduit size is not indicated, size to comply with NFPA 70 but not less than applicable minimum size requirements specified.

2.03 GALVANIZED STEEL RIGID METAL CONDUIT (RMC)

A. Description: NFPA 70, Type RMC galvanized steel rigid metal conduit complying with ANSI C80.1 and listed and labeled as complying with UL 6.

B. Fittings:
   1. Nonhazardous Locations: Use fittings complying with NEMA FB 1 and listed and labeled as complying with UL 514B or UL 6.
   2. Material: Use steel or malleable iron.
   3. Connectors and Couplings: Use threaded type fittings only. Threadless fittings, including set screw and compression/gland types, are not permitted.

2.04 RIGID POLYVINYL CHLORIDE (PVC) CONDUIT

A. Description: NFPA 70, Type PVC rigid polyvinyl chloride conduit complying with NEMA TC 2 and listed and labeled as complying with UL 651; Schedule 40 unless otherwise indicated, Schedule 80 where subject to physical damage; rated for use with conductors rated 90 degrees C.

B. Fittings:
   1. Manufacturer: Same as manufacturer of conduit to be connected.
   2. Description: Fittings complying with NEMA TC 3 and listed and labeled as complying with UL 651; material to match conduit.

2.05 ACCESSORIES

A. Conduit Joint Compound: Corrosion-resistant, electrically conductive compound listed as complying with UL 2419; suitable for use with conduit to be installed.

B. Solvent Cement for PVC Conduit and Fittings: As recommended by manufacturer of conduit and fittings to be installed.

C. Pull Strings: Use nylon or polyester tape with average breaking strength of not less than 1,250 lbf.

D. Foam Conduit Sealant:
   1. Removable, two-part, closed-cell foam, specifically designed for sealing conduit openings against water, moisture, gases, and dust.

2. Suitable for use with conductors/cables and associated insulation/jackets to be installed.
3. Rated to hold minimum of 10 ft water head pressure.

PART 3 EXECUTION

3.01 INSTALLATION

A. Install products in accordance with manufacturer's instructions.

B. Install conduit in accordance with NECA 1.

C. Galvanized Steel Rigid Metal Conduit (RMC): Install in accordance with NECA 101.

D. Rigid Polyvinyl Chloride (PVC) Conduit: Install in accordance with NECA 111.

E. Liquidtight Flexible Nonmetallic Conduit (LFNC): Installed up tree for decorative pendant lights.

F. Connections and Terminations:
   1. Use approved zinc-rich paint or conduit joint compound on field-cut threads of galvanized steel conduits prior to making connections.
   2. Where two threaded conduits must be joined and neither can be rotated, use three-piece couplings or split couplings. Do not use running threads.
   3. Use suitable adapters where required to transition from one type of conduit to another.
   4. Terminate threaded conduits in boxes and enclosures using threaded hubs for dry locations and raintight hubs for wet locations.
   5. Provide insulating bushings, insulated throats, or listed metal fittings with smooth, rounded edges at conduit terminations to protect conductors.
   6. Secure joints and connections to provide mechanical strength and electrical continuity.

G. Underground Installation:
   1. Minimum Cover, Unless Otherwise Indicated or Required:
      a. Underground, Exterior: 18 inches.

H. Conduit Movement Provisions: Where conduits are subject to movement, provide expansion and expansion/deflection fittings to prevent damage to enclosed conductors or connected equipment. This includes, but is not limited to:
   1. Where conduits cross structural joints intended for expansion, contraction, or deflection.
   2. Where calculated in accordance with NFPA 70 for rigid polyvinyl chloride (PVC) conduit installed above ground to compensate for thermal expansion and contraction.
   3. Where conduits are subject to earth movement by settlement or frost.

I. Conduit Sealing:
   1. Use foam conduit sealant to prevent entry of moisture and gases. This includes, but is not limited to:
      a. Where conduits enter building from outside.
      b. Where service conduits enter building from underground distribution system.
      c. Where conduits enter building from underground.
      d. Where conduits may transport moisture to contact live parts.
   2. Where conduits cross barriers between areas of potential substantial temperature differential, use foam conduit sealant at accessible point near penetration to prevent condensation. This includes, but is not limited to:
      a. Where conduits pass from outdoors into conditioned interior spaces.
      b. Where conduits pass from unconditioned interior spaces into conditioned interior spaces.

J. Provide grounding and bonding; see Section 26 05 26.

3.02 CLEANING

A. Clean interior of conduits to remove moisture and foreign matter.

3.03 PROTECTION

A. Immediately after installation of conduit, use suitable manufactured plugs to provide protection from entry of moisture and foreign material and do not remove until ready for installation of conductors.

END OF SECTION

SECTION 26 05 33.16
BOXES FOR ELECTRICAL SYSTEMS

PART 1 GENERAL

1.01 SECTION INCLUDES

A. Outlet and device boxes up to 100 cubic inches, including those used as junction and pull boxes.

B. Cabinets and enclosures, including junction and pull boxes larger than 100 cubic inches.

C. Underground boxes/enclosures.

1.02 REFERENCE STANDARDS

A. NECA 1 - Standard for Good Workmanship in Electrical Construction; 2023.

B. NECA 130 - Standard for Installing and Maintaining Wiring Devices; 2016.

C. NFPA 70 - National Electrical Code; Most Recent Edition Adopted by Authority Having Jurisdiction, Including All Applicable Amendments and Supplements.

D. SCTE 77 - Specifications for Underground Enclosure Integrity; 2023.

1.03 ADMINISTRATIVE REQUIREMENTS

A. Coordination:
   1. Coordinate the work with other trades to avoid placement of ductwork, piping, equipment, or other potential obstructions within the dedicated equipment spaces and working clearances for electrical equipment required by NFPA 70.
   2. Coordinate arrangement of electrical equipment with the dimensions and clearance requirements of the actual equipment to be installed.
   3. Coordinate minimum sizes of boxes with the actual installed arrangement of conductors, clamps, support fittings, and devices, calculated according to NFPA 70.
   4. Coordinate minimum sizes of pull boxes with the actual installed arrangement of connected conduits, calculated according to NFPA 70.
   5. Coordinate the placement of boxes with millwork, furniture, devices, equipment, etc. installed under other sections or by others.
   6. Coordinate the work with other trades to preserve insulation integrity.
   7. Coordinate the work with other trades to provide walls suitable for installation of flush-mounted boxes where indicated.
   8. Notify Engineer of any conflicts with or deviations from Contract Documents. Obtain direction before proceeding with work.

1.04 QUALITY ASSURANCE

A. Comply with requirements of NFPA 70.

PART 2 PRODUCTS

2.01 BOXES

A. General Requirements:
   1. Do not use boxes and associated accessories for applications other than as permitted by NFPA 70 and product listing.
   2. Provide all boxes, fittings, supports, and accessories required for a complete raceway system and to accommodate devices and equipment to be installed.
   3. Provide products listed, classified, and labeled as suitable for the purpose intended.
   4. Where box size is not indicated, size to comply with NFPA 70 but not less than applicable minimum size requirements specified.
   5. Provide grounding terminals within boxes where equipment grounding conductors terminate.

B. Underground Boxes/Enclosures:

1. Description: In-ground, open bottom boxes furnished with flush, non-skid covers with legend indicating type of service and stainless steel tamper resistant cover bolts.
2. Size: As indicated on drawings.
3. Depth: As required to extend below frost line to prevent frost upheaval, but not less than 12 inches.
4. Applications:
   a. Sidewalks and Landscaped Areas Subject Only to Occasional Nondeliberate Vehicular Traffic: Use polymer concrete enclosures, with minimum SCTE 77 Tier 8 load rating.
   b. Do not use polymer concrete enclosures in areas subject to deliberate vehicular traffic.
5. Polymer Concrete Underground Boxes/Enclosures: Comply with SCTE 77.
   a. Combination fiberglass/polymer concrete boxes/enclosures are acceptable.

PART 3 EXECUTION

3.01 INSTALLATION

A. Install products in accordance with manufacturer's instructions.

B. Install boxes in accordance with NECA 1 (general workmanship) and, where applicable, NECA 130, including mounting heights specified in those standards where mounting heights are not indicated.

C. Arrange equipment to provide minimum clearances in accordance with manufacturer's instructions and NFPA 70.

D. Install boxes plumb and level.

E. Install boxes as required to preserve insulation integrity.

F. Underground Boxes/Enclosures:
   1. Install enclosure on gravel base, minimum 6 inches deep.
   2. Flush-mount enclosures located in concrete or paved areas.
   3. Mount enclosures located in landscaped areas with top at 1 inch above finished grade.
   4. Install additional bracing inside enclosures in accordance with manufacturer's instructions to minimize box sidewall deflections during backfilling. Backfill with cover bolted in place.

G. Install permanent barrier between ganged wiring devices when voltage between adjacent devices exceeds 300 V.

H. Close unused box openings.

I. Install blank wall plates on junction boxes and on outlet boxes with no devices or equipment installed or designated for future use.

J. Provide grounding and bonding in accordance with Section 26 05 26.

3.02 CLEANING

A. Clean interior of boxes to remove dirt, debris, plaster and other foreign material.

3.03 PROTECTION

A. Immediately after installation, protect boxes from entry of moisture and foreign material until ready for installation of conductors.

END OF SECTION

SECTION 26 05 53
IDENTIFICATION FOR ELECTRICAL SYSTEMS

PART 1 GENERAL

1.01 SECTION INCLUDES

A. Electrical identification requirements.

B. Identification nameplates and labels.

C. Wire and cable markers.

D. Underground warning tape.

E. Warning signs and labels.

1.02 REFERENCE STANDARDS

A. NFPA 70 - National Electrical Code; Most Recent Edition Adopted by Authority Having Jurisdiction, Including All Applicable Amendments and Supplements.

B. NFPA 70E - Standard for Electrical Safety in the Workplace; 2027.

C. UL 969 - Marking and Labeling Systems; Current Edition, Including All Revisions.

1.03 QUALITY ASSURANCE

A. Comply with requirements of NFPA 70.

PART 2 PRODUCTS

2.01 IDENTIFICATION REQUIREMENTS

A. Identification for Equipment:
   1. Use identification nameplate to identify each piece of electrical distribution and control equipment and associated sections, compartments, and components.
   2. Available Fault Current Documentation: Use identification label to identify the available fault current and date calculations were performed at locations requiring documentation by NFPA 70 including but not limited to the following.
      a. Service equipment.
      b. Industrial control panels.
      c. Motor control centers.
      d. Elevator control panels.
      e. Industrial machinery.
   3. Arc Flash Hazard Warning Labels: Use warning labels to identify arc flash hazards for electrical equipment, such as switchboards, panelboards, industrial control panels, meter socket enclosures, and motor control centers that are likely to require examination, adjustment, servicing, or maintenance while energized.
      a. Minimum Size: 3.5 by 5 inches.
      b. Legend: Include orange header that reads "WARNING", followed by the word message "Arc Flash and Shock Hazard; Appropriate PPE Required; Do not operate controls or open covers without appropriate personal protection equipment; Failure to comply may result in injury or death; Refer to NFPA 70E for minimum PPE requirements" or approved equivalent.

B. Identification for Conductors and Cables:
   1. Color Coding for Power Conductors 600 V and Less: Comply with Section 26 05 19.
   2. Use identification nameplate or identification label to identify color code for ungrounded and grounded power conductors inside door or enclosure at each piece of feeder or branch-circuit distribution equipment when premises has feeders or branch circuits served by more than one nominal voltage system.
   3. Use wire and cable markers to identify circuit number or other designation indicated for power, control, and instrumentation conductors and cables at the following locations:
      a. At each source and load connection.

b. Within boxes when more than one circuit is present.
c. Within equipment enclosures when conductors and cables enter or leave the enclosure.

C. Identification for Raceways:
1. Use underground warning tape to identify underground raceways.

D. Identification for Devices:
1. Use identification label to identify serving branch circuit.

2.02 IDENTIFICATION NAMEPLATES AND LABELS

A. Identification Nameplates:
1. Materials:
a. Indoor Clean, Dry Locations: Use plastic nameplates.
b. Outdoor Locations: Use plastic, stainless steel, or aluminum nameplates suitable for exterior use.
2. Plastic Nameplates: Two-layer or three-layer laminated acrylic or electrically non-conductive phenolic with beveled edges; minimum thickness of 1/16 inch; engraved text.
3. Stainless Steel Nameplates: Minimum thickness of 1/32 inch; engraved or laser-etched text.
4. Aluminum Nameplates: Anodized; minimum thickness of 1/32 inch; engraved or laser-etched text.
5. Mounting Holes for Mechanical Fasteners: Two, centered on sides for sizes up to 1 inch high; Four, located at corners for larger sizes.

B. Identification Labels:
1. Materials: Use self-adhesive laminated plastic labels; UV, chemical, water, heat, and abrasion resistant.
2. Text: Use factory pre-printed or machine-printed text. Do not use handwritten text unless otherwise indicated.

2.03 WIRE AND CABLE MARKERS

A. Markers for Conductors and Cables: Use wrap-around self-adhesive vinyl cloth, wrap-around self-adhesive vinyl self-laminating, heat-shrink sleeve, plastic sleeve, plastic clip-on, or vinyl split sleeve type markers suitable for the conductor or cable to be identified.

B. Markers for Conductor and Cable Bundles: Use plastic marker tags secured by nylon cable ties.

C. Legend: Power source and circuit number or other designation indicated.

D. Text: Use factory pre-printed or machine-printed text, all capitalized unless otherwise indicated.

E. Minimum Text Height: 1/8 inch.

F. Color: Black text on white background unless otherwise indicated.

2.04 UNDERGROUND WARNING TAPE

A. Material: Polyethylene tape suitable for direct burial.

B. Materials: Use foil-backed detectable type polyethylene tape suitable for direct burial, unless otherwise indicated.

C. Detectable Tape for Open Trench Applications: 4 inches wide, with minimum thickness of 5 mils, 0.0005 inch; provide integral foil core or tracer wire for detection by locator.

D. Legend: Type of service, continuously repeated over full length of tape.

E. Color:
1. Buried Electrical Lines: Black text on red background.

2.05 WARNING SIGNS AND LABELS

A. Comply with ANSI Z535.2 or ANSI Z535.4 as applicable.

B. Warning Labels:
   1. Materials: Use factory pre-printed or machine-printed self-adhesive polyester or self-adhesive vinyl labels; UV, chemical, water, heat, and abrasion resistant; produced using materials recognized to UL 969.
   2. Machine-Printed Labels: Use thermal transfer process printing machines and accessories recommended by label manufacturer.
   3. Minimum Size: 2 by 4 inches unless otherwise indicated.

PART 3 EXECUTION

3.01 PREPARATION

A. Clean surfaces to receive adhesive products according to manufacturer's instructions.

3.02 INSTALLATION

A. Install products in accordance with manufacturer's instructions.

B. Install identification products to be plainly visible for examination, adjustment, servicing, and maintenance. Unless otherwise indicated, locate products as follows:
   1. Surface-Mounted Equipment: Enclosure front.
   2. Flush-Mounted Equipment: Inside of equipment door.
   3. Free-Standing Equipment: Enclosure front; also enclosure rear for equipment with rear access.
   4. Elevated Equipment: Legible from the floor or working platform.
   5. Interior Components: Legible from the point of access.
   6. Conduits: Legible from the floor.
   7. Conductors and Cables: Legible from the point of access.
   8. Devices: Outside face of cover.

C. Install identification products centered, level, and parallel with lines of item being identified.

D. Secure nameplates to exterior surfaces of enclosures using stainless steel screws and to interior surfaces using self-adhesive backing or epoxy cement.

E. Install self-adhesive labels and markers to achieve maximum adhesion, with no bubbles or wrinkles and edges properly sealed.

F. Install underground warning tape above buried lines with one tape per trench at 3 inches below finished grade.

3.03 FIELD QUALITY CONTROL

A. Replace self-adhesive labels and markers that exhibit bubbles, wrinkles, curling or other signs of improper adhesion.

END OF SECTION

SECTION 26 21 00
LOW-VOLTAGE ELECTRICAL SERVICE ENTRANCE

PART 1 GENERAL

1.01 SECTION INCLUDES

A. Electrical service requirements.

1.02 DEFINITIONS

A. Service Point: The point of connection between the facilities of the serving utility and the premises wiring as defined in NFPA 70, and as designated by the Utility Company.

1.03 REFERENCE STANDARDS

A. IEEE C2 - National Electrical Safety Code(R) (NESC(R)); 2023.

B. NECA 1 - Standard for Good Workmanship in Electrical Construction; 2023.

C. NFPA 70 - National Electrical Code; Most Recent Edition Adopted by Authority Having Jurisdiction, Including All Applicable Amendments and Supplements.

1.04 ADMINISTRATIVE REQUIREMENTS

A. No later than two weeks following date established in Notice to Proceed, notify Utility Company of anticipated date of service.

B. Coordination:
   1. Verify the following with Utility Company representative:
      a. Utility Company requirements, including division of responsibility.
      b. Exact location and details of utility point of connection.
      c. Utility easement requirements.
      d. Utility Company charges associated with providing service.
   2. Coordinate the work with other trades to avoid placement of other utilities or obstructions within the spaces dedicated for electrical service and associated equipment.
   3. Coordinate arrangement of service entrance equipment with the dimensions and clearance requirements of the actual equipment to be installed.
   4. Notify Engineer of any conflicts with or deviations from Contract Documents. Obtain direction before proceeding with work.

C. Arrange for Utility Company to provide permanent electrical service. Prepare and submit documentation required by Utility Company.

D. Utility Company charges associated with providing permanent service to be paid by Owner.

E. Preinstallation Meeting: Convene one week prior to commencing work of this section to review service requirements and details with Utility Company representative.

F. Scheduling:
   1. Arrange for inspections necessary to obtain Utility Company approval of installation.

1.05 QUALITY ASSURANCE

A. Comply with the following:
   1. IEEE C2 (National Electrical Safety Code).
   2. NFPA 70 (National Electrical Code).
   3. The requirements of the Utility Company.

1.06 DELIVERY, STORAGE, AND HANDLING

A. Receive, inspect, handle, and store products in accordance with manufacturer's instructions.

B. Store products indoors in a clean, dry space having a uniform temperature to prevent condensation (including outdoor rated products which are not weatherproof until completely and properly installed). Maintain factory wrapping or provide an additional heavy canvas or heavy plastic cover to protect units from dirt, water, construction debris, and traffic.

C. Handle products carefully to avoid damage to internal components, enclosure, and finish.

PART 2 PRODUCTS

2.01 ELECTRICAL SERVICE REQUIREMENTS

A. Provide new electrical service consisting of all required conduits, conductors, equipment, metering provisions, supports, accessories, etc. as necessary for connection between Utility Company point of supply and service entrance equipment.

B. Electrical Service Characteristics: As indicated on drawings.

C. Division of Responsibility:
   1. Pad-Mounted Utility Transformers:
      a. Transformer Vaults and Pads: Furnished and installed by Contractor per Utility Company requirements.
      b. Transformers: Furnished and installed by Utility Company.
      c. Transformer Grounding Provisions: Furnished and installed by Contractor per Utility Company requirements.
      d. Transformer Protective Bollards: Furnished and installed by Contractor per Utility Company requirements.
      e. Primary:
         1) Trenching and Backfilling: Provided by Contractor.
         2) Conduits: Furnished and installed by Contractor.
         3) Conductors: Furnished and installed by Utility Company.
      f. Secondary:
         1) Trenching and Backfilling: Provided by Contractor.
         2) Conduits: Furnished and installed by Contractor.
         3) Conductors: Furnished and installed by Utility Company (Service Point at service entrance equipment).
   2. Terminations at Service Point: Provided by Utility Company.
   3. Metering Provisions:
      a. Meter Bases: Furnished and installed by Contractor per Utility Company requirements.

D. Products Furnished by Contractor: Comply with Utility Company requirements.

PART 3 EXECUTION

3.01 EXAMINATION

A. Verify that field measurements are as indicated.

B. Verify that ratings and configurations of service entrance equipment are consistent with the indicated requirements.

C. Verify that conditions are satisfactory for installation prior to starting work.

3.02 PREPARATION

A. Verify and mark locations of existing underground utilities.

3.03 INSTALLATION

A. Install products in accordance with manufacturer's instructions and Utility Company requirements.

B. Perform work in accordance with NECA 1 (general workmanship).

C. Arrange equipment to provide minimum clearances and required maintenance access.

D. Construct cast-in-place concrete pads for utility equipment in accordance with Utility Company requirements.

E. Provide required protective bollards in accordance with Utility Company requirements.

3.04 PROTECTION

A. Protect installed equipment from subsequent construction operations.

END OF SECTION

Appendix C

Project Drawings

SANTA YNEZ RIVER WATER CONSERVATION DISTRICT
IMPROVEMENT DISTRICT NO. 1
ZONE 2 RESERVOIR ELECTRICAL SERVICE

2201 ALAMO PINTADO ROAD
LOS OLIVOS, CA

SHEET LIST

E1 - TITLE SHEET AND SINGLE LINE DIAGRAM
E2 - SITE ELECTRICAL PLAN
E3 - METER PEDESTAL DETAIL

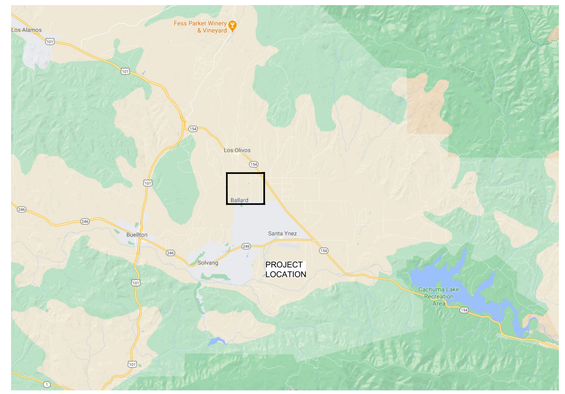

VICINITY MAP

NORTH

PROJECT DESCRIPTION

- **NEW PG&E SERVICE CONDUIT**
- **NEW METERED PEDESTAL**
- **NEW FEEDERS TO NEW RESERVOIR MIXERS.**

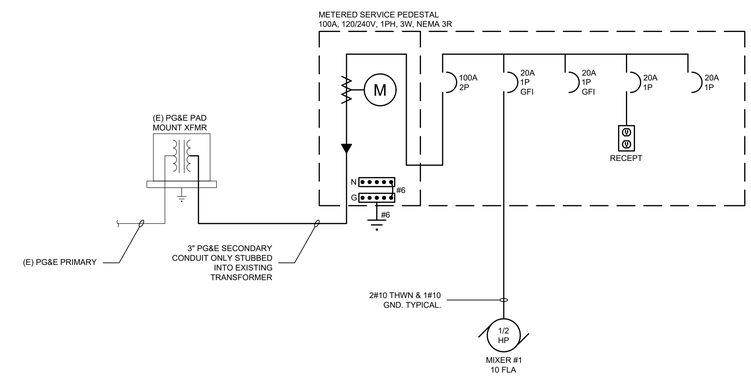

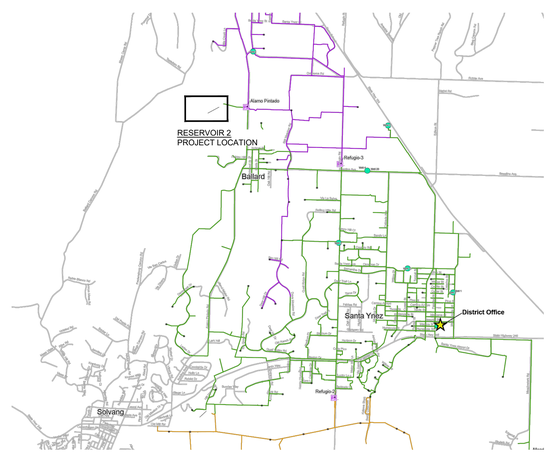

PROJECT LOCATIONS

SINGLE LINE DIAGRAM

BUS RATING: 100A, 120/240V, 1PH, 3W
MAIN: 100A, MAIN CIRCUIT BREAKER
SPACES: 12 FULL SIZE BOLT-ON CB SPACES
AIC RATING: 14 KAIC PANEL

PANEL MP

PEDESTAL, NEMA 3R
LOCATION: SITE
WITH EQUIPMENT GND BUS

CKT %VD	DIST (FT)	NOTES	LOAD TYPE	CKT	DESCRIPTION	TRIP	POLES	COND SIZE	CONNECTED VA PHASE A	CONNECTED VA PHASE B	COND SIZE	POLES	TRIP	DESCRIPTION	CKT	LOAD TYPE	NOTES	DIST (FT)	CKT %VD
				1	MIXER 1	20	1	12	1200 180		12	1	20	RECEPTACLE (INSIDE PEDESTAL)	2		1		
				3	(FUTURE) MIXER 2	20	1	12		1200				SPACE	4				
				5	SPARE	20	1	12						"	6				
				7	SPACE									"	8				
				9	"									"	10				
				11	"									"	12				

	PHASE A	PHASE B
CON:	1380	1200
25%:	0	0
SUB:	0	0
TOT:	1380	1200
AMPS	12	10

PANEL NOTES:
1. INSTALL GFCI RECEPTACLE WITHIN PEDESTAL

LOAD (VA)	LOAD TYPE	LEGEND
0	R	RECEPTACLE
0	L	LIGHTING (125% OF CONNECTED LOAD CEC 215.2)
0	M	MECHANICAL
0	K	KITCHEN APPLIANCE
0	N	NON-CONTINUOUS MISC.
0	C	CONTINUOUS MISC. (125% OF CONNECTED LOAD CEC 215.2)

REVISIONS:
REV: DATE: DESCRIPTION

STAMP:
REGISTERED PROFESSIONAL ENGINEER
GARRETT NOLD
No. 15633
Exp. 9-30-26
ELECTRICAL
STATE OF CALIFORNIA
NOT FOR CONSTRUCTION

OTTO ELECTRICAL
OTTO ELECTRICAL, INC.
SAN LUIS OBISPO, CA
GOTTO@OTTOELECTRICAL.COM
805-459-4329

THESE DRAWINGS ARE INSTRUMENTS OF SERVICE AND ARE THE PROPERTY OF OTTO ELECTRICAL, INC. REPRODUCTION OF THESE DRAWINGS, IN WHOLE OR IN PART, OR USE OF THE DRAWINGS FOR OTHER PROJECTS AND SHALL NOT BE DRAWN ON FOR THE USE OF THE DRAWINGS FOR OTHER PROJECTS WITHOUT THE PERMISSION OF OTTO ELECTRICAL.

PROJECT:
SANTA YNEZ RIVER WATER CONSERVATION DISTRICT IMPROVEMENT DISTRICT 1
ZONE 2 RESERVOIR ELECTRICAL SERVICE

SHEET TITLE:
Title Sheet and Single Line Diagram

PRINT DATE:	8/10/2026
DRWN BY:	GNO
CHKD BY:	GNO
SCALE:	AS NOTED
JOB NO:	25-013
SHEET NO:	E1

8/10/2026 11:53 AM
G:\Shared drives\Projects\2025\25-013\2-DESIGN\CAD\25-013_DETAILS

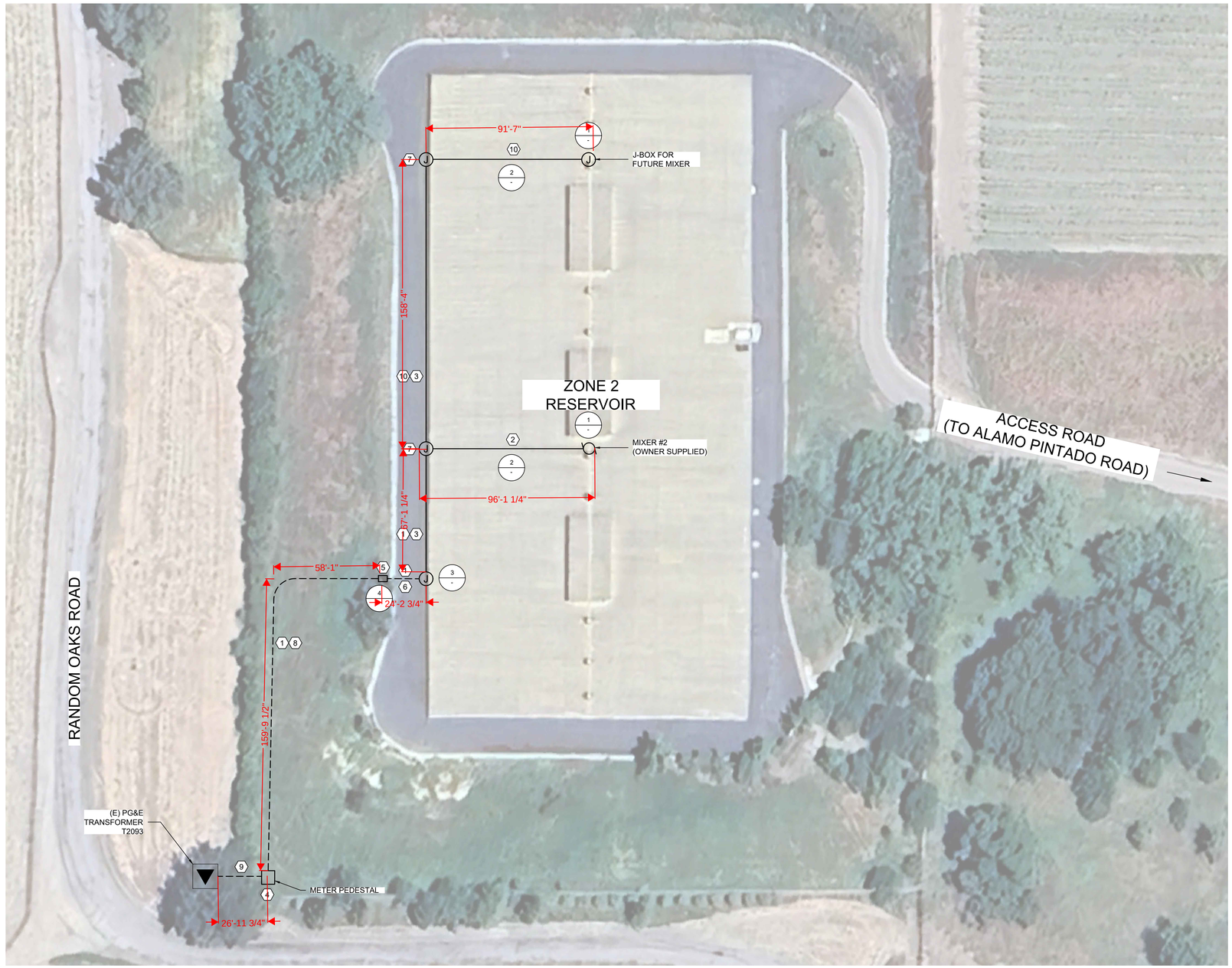

SITE ELECTRICAL PLAN

SCALE: 1"=30'

NORTH

REFERENCE NOTES

1. 1"C - 2#10 THWN & 2#10 GND.
2. 3/4" EMT - 2#10 THWN & 1#10 GND. SECURE TO EVERY 5FT.
3. ROUTE CONDUIT UNDER ROOF OVERHANG. SUPPORT WITH GALVANIZED CONDUIT STRAPS AND HARDWARE AT INTERVALS PER NEC REQUIREMENTS.
4. NEW 100A, 120/240V, 1PH, 3W METER PEDESTAL. INSTALL ON 6" DEEP CONCRETE PAD. EXTEND PAD 3" BEYOND PEDESTAL ON ALL SIDES.
5. 12"X18" AT GRADE CONCRETE PULL BOX.
6. TRENCH ACROSS ASPHALT ROADWAY AND REPAIR TO MATCH EXISTING CONDITIONS.
7. PROVIDE 6"x6"x4" NEMA 3R JUNCTION BOX MOUNTED TO EXTERIOR OF RESERVOIR. TYP.
8. (2)2" CONDUIT ONLY WITH PULL ROPE.
9. 3" CONDUIT ONLY FOR PG&E SECONDARY BETWEEN EXISTING TRANSFORMER AND NEW METERED PEDESTAL.
10. 3/4" EMT - CONDUIT ONLY FOR FUTURE MIXER.

REVISIONS:

REV.	DATE	DESCRIPTION

STAMP:

REGISTERED PROFESSIONAL ENGINEER
GARRETT OTTO
NOT FOR CONSTRUCTION
9-30-26
ELECTRICAL
STATE OF CALIFORNIA

OTTO ELECTRICAL

OTTO ELECTRICAL, INC.
SAN LUIS OBISPO, CA
GOTTO@OTTOELECTRICAL.COM
805.459.4329

THESE DRAWINGS ARE INSTRUMENTS OF SERVICE AND ARE THE PROPERTY OF OTTO ELECTRICAL, INC. ALL DESIGNS AND OTHER INFORMATION ON THESE DRAWINGS ARE FOR THE USE OF THE SPECIFIED PROJECT AND SHALL NOT BE USED OTHERWISE OR REPRODUCED WITHOUT THE EXPRESSED WRITTEN PERMISSION OF OTTO ELECTRICAL.

River Water Conservation District
SANTA YNEZ
Improvement District No. 1

PROJECT:

SANTA YNEZ RIVER WATER CONSERVATION DISTRICT IMPROVEMENT DISTRICT 1

ZONE 2 RESERVOIR ELECTRICAL SERVICE

SHEET TITLE:

SITE ELECTRICAL PLAN

PRINT DATE:	8/10/2026
DRWN BY:	GNO
CHKD BY:	GNO
SCALE:	AS NOTED
JOB NO:	25-013
SHEET NO:	

E2

8/10/2026 11:53 AM

G:\Shared drives\Projects\2025\25-013\2-DESIGN\CAD\25-013_SITE

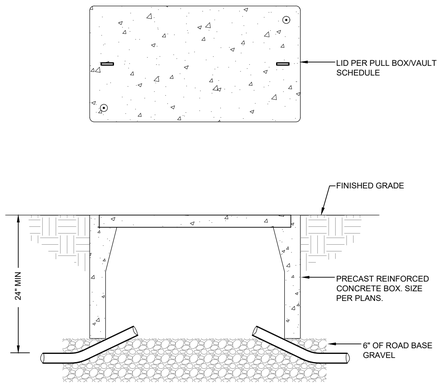

4 TYPICAL AT GRADE PULL BOX DETAIL (30"X48" AND SMALLER)

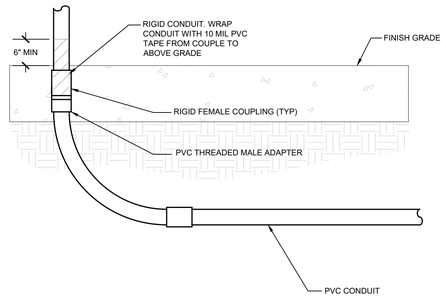

3 TYPICAL CONDUIT TRANSITION

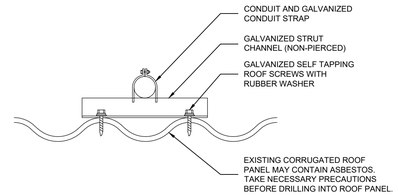

2 TYPICAL CONDUIT ROOF MOUNT

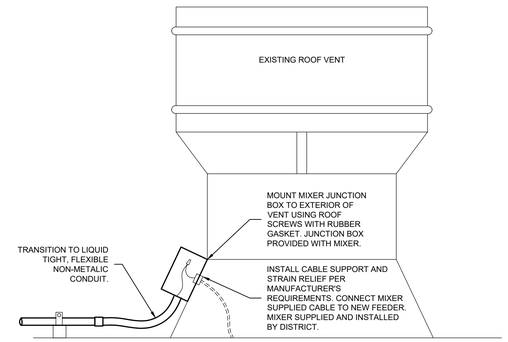

1 TYPICAL MIXER PENETRATION

MYERS Power Products, Inc.

MEUG16
(formerly MEUGL)
Caltrans Type III-BF

Designed to supply metered power to remote locations.
Typical applications include parking lot lighting, pump stations, and street lighting.

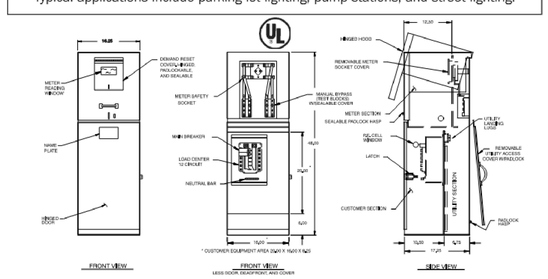

STANDARD FEATURES

- Standard voltage 120/240V 1ø 3W.
- Meter Socket: 4 jaw, 100 amps or 200 amps.
- Meter socket with test blocks.
- 12 circuit copper bussed interior.
- Main Breaker: 100 amp or 200 amp, 10k AIC.
- Utility Landing Lugs: 200 amps, 250 kcmil.
- Utility test section.
- Vandal-resistant hinged door and dead front.
- Light green powder coat finish in accordance with ASTM B-117. Custom colors available.

OPTIONAL FEATURES

- Maximum voltage 480Y/277V 3ø 4W (may effect optional equipment).
- 12 circuit interior may be increased to 30 circuit.
- Higher AIC available upon request.
- P.E. cell, test switch, lighting relay may be added to standard.
- Some equipment modifications available. Consult your factory representative.
- Meter Sockets: 5 jaw or 7 jaw, 100 amps or 200 amps.
- Uni-body construction available in steel, stainless steel, and aluminum.
- Pad Mounting Base available for concrete foundation. Order separately - MEUG16-BASE.
- Anchor Bolts. Order separately - 714548 (quantity 4).

SPECIFICATIONS

- 12-gauge corrosion-resistant zinc-coated steel construction. Hood and covers 14-gauge.
- Rainproof Type 3R enclosure.
- Complies with Caltrans specification ES-2E.
- Meets EUSERC 308 requirements.
- All factory wiring is 600 volt rated copper.
- Acceptable circuit breakers are GE, ITE, Crouse-Hinds/ Murray, Cutler-Hammer.
- Suitable for use without main when no more than six service disconnects are installed and used in accordance with article 384 of the NEC.
- Listed by Underwriters Laboratories, Inc.

10/19/04

9 METER PEDESTAL

*REFER TO PG&E GREENBOOK DOCUMENT 038193 FOR ADDITIONAL REQUIREMENTS

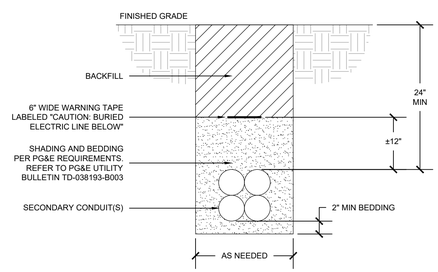

6 TYPICAL UTILITY SECONDARY TRENCH DETAIL

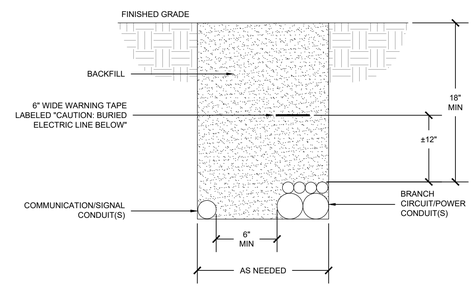

5 TYPICAL BRANCH CIRCUIT DETAIL

8 NOT USED

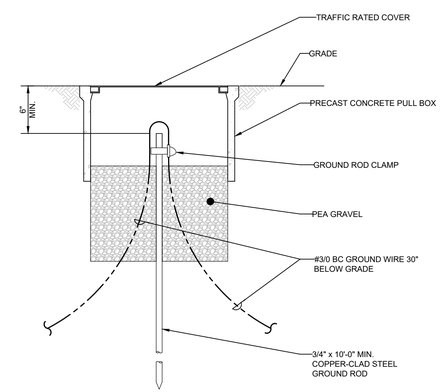

7 TYPICAL GROUND WELL DETAIL

REVISIONS:

REV:	DATE:	DESCRIPTION

STAMP:

REGISTERED PROFESSIONAL ENGINEER
GARRETT NOLTE
NOT FOR CONSTRUCTION
No. E-18833
Exp. 9-30-26
ELECTRICAL
STATE OF CALIFORNIA

OTTO ELECTRICAL
OTTO ELECTRICAL, INC.
SAN LUIS OBISPO, CA
GOTTO@OTTOELECTRICAL.COM
805-458-4429

THESE DRAWINGS ARE INSTRUMENTS OF SERVICE AND ARE THE PROPERTY OF OTTO ELECTRICAL, INC. REPRODUCTION OF THESE DRAWINGS OR USE OF THE DRAWINGS FOR OTHER PROJECTS AND SHALL NOT BE DISCLOSED TO OTHERS WITHOUT WRITTEN PERMISSION OF OTTO ELECTRICAL.

Santa Ynez River Water Conservation District Improvement District No. 1

PROJECT:
SANTA YNEZ RIVER WATER CONSERVATION DISTRICT IMPROVEMENT DISTRICT 1
ZONE 2 RESERVOIR ELECTRICAL SERVICE

SHEET TITLE:
METER PEDESTAL DETAIL

PRINT DATE:	8/10/2026
DRWN BY:	GNO
CHKD BY:	GNO
SCALE:	AS NOTED
JOB NO:	25-013

SHEET NO:
E3

8/10/2026 11:53 AM
G:\Shared drives\Projects\2025\25-0192-DESIGN\CAD\25-013_SITE

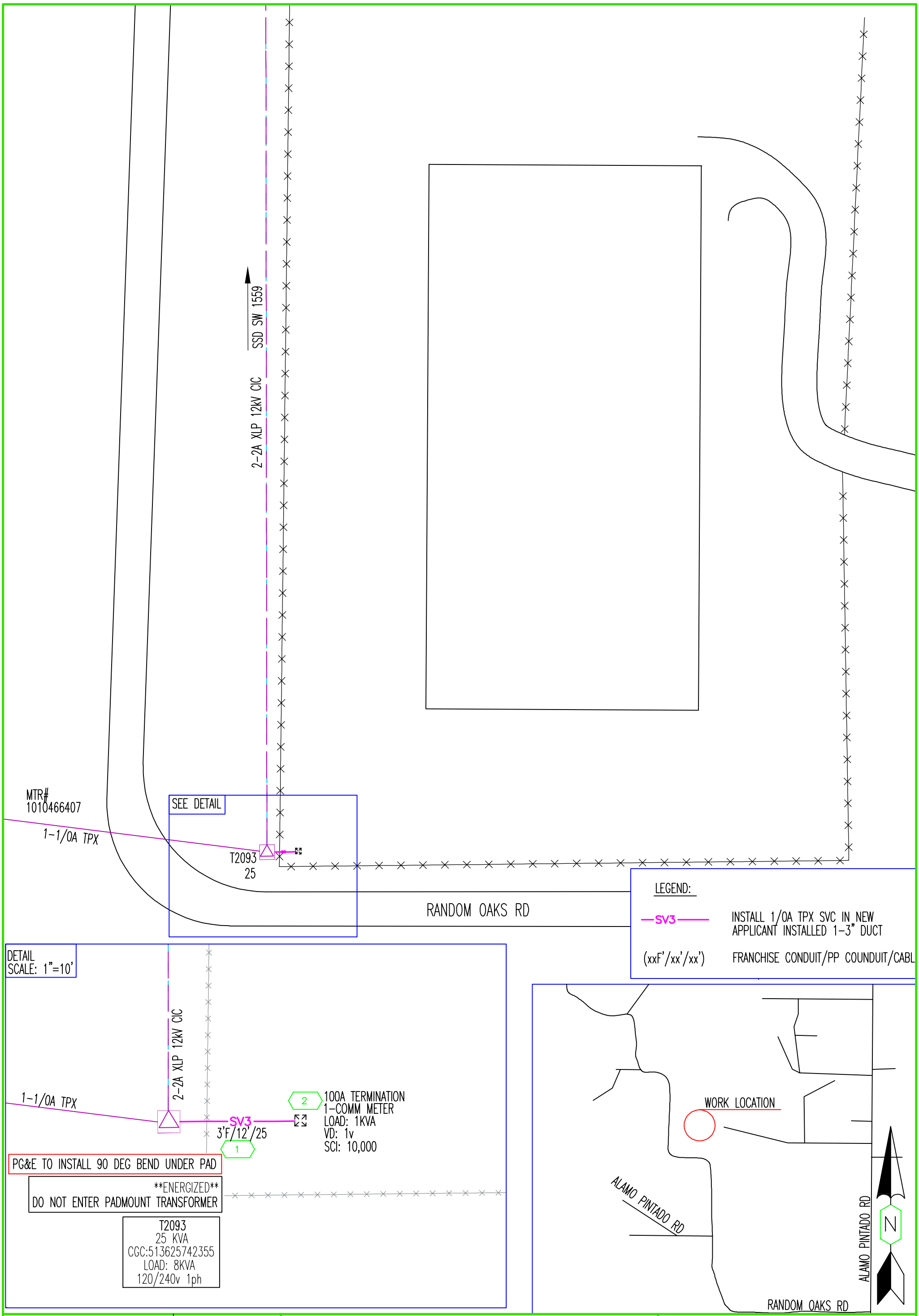

PRIMARY VOLTAGE: 12 kV	INSULATION DIST: AA	16H- 100A PANEL 2007 ALAMO PINTADO ROAD BALLARD	EST: MIKE CATANO 805-256-2523
LATITUDE: 34.64513	LONGITUDE: -120.12118		ADE: MIKE SENTEIO 925-375-0017
SOURCE SIDE DEVICE: SW1559			SUPV: DJ ALSPAW 661-221-1523
SUB & CIRCUIT: ZACA-1102			REP: LAURA KIM 805-2951330
DSGN SAG: LIGHT RURAL	RAPTOR ZONE: YES		PLNR: EMIGDIO ISLAS 805-263-3438
LOADING AREA: LIGHT	ARRESTER DIST: 2	Know what's below. Call before you dig.	NOTIF: 131547832 JPA#:
CORROSION AREA: NON		NO ENVIRONMENTAL ISSUES	SCALE: 1"=50' DATE: 10-8-25
EXEMPT EQUIP.INST.: N/A	FIRE AREA: SRA-TIER 1	GAS CONFLICT: IN PROXIMITY NEAR LOC: 1	PM: 35683356 SHEET: 1 OF 1 REV. 0